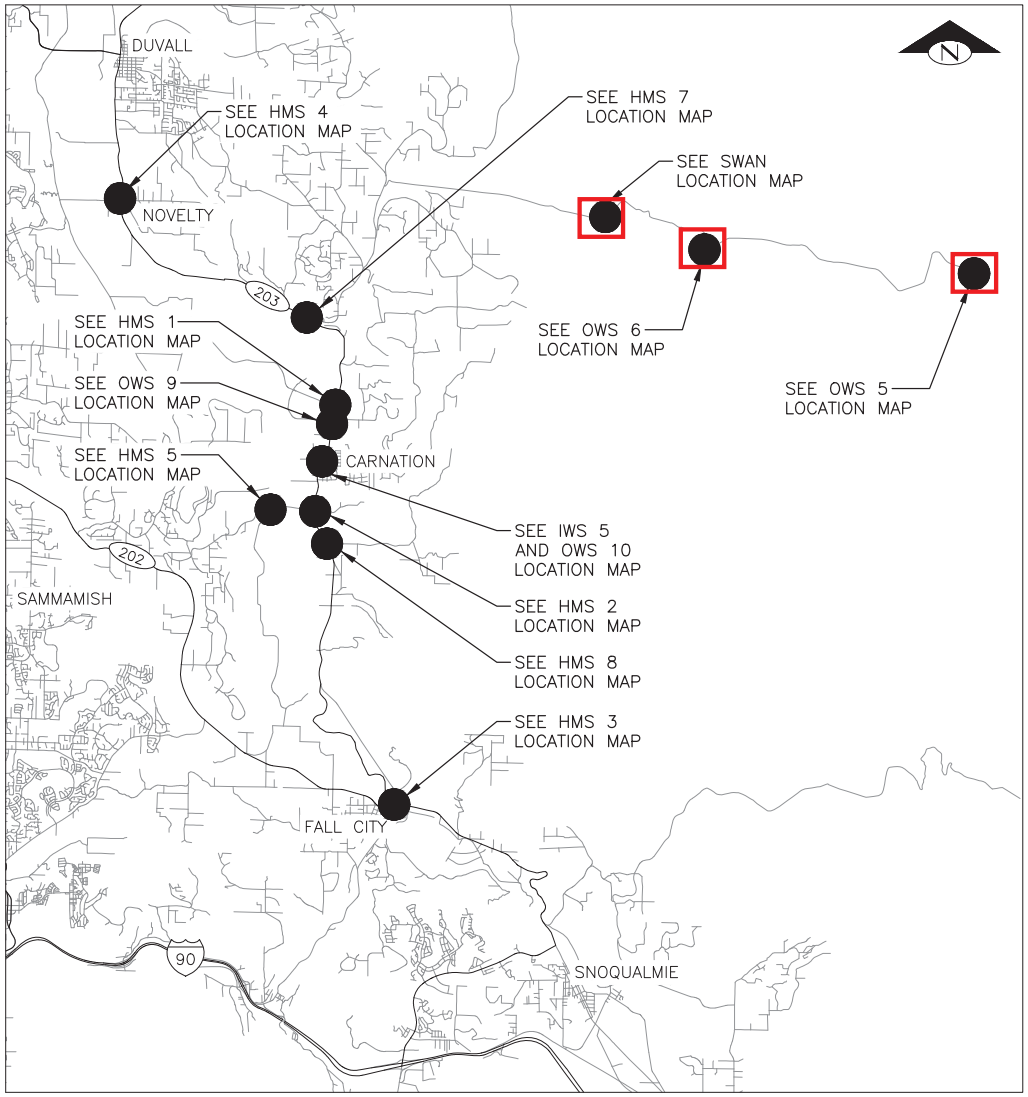

VICINITY MAP

1 0 1 2

SCALE: 1" = 1 MILE

NOTE:
THE TOTAL WORK FOR THE TOLT DAM EARLY WARNING SYSTEM UPGRADE IS SPLIT AMONG THREE (3) PACKAGES: THE SIREN REPLACEMENT PROJECT (SRP) PACKAGE, THE OTHER PROJECT COMPONENTS (OPC) PACKAGE, AND THE MICROWAVE WORK (MW) PACKAGE. THIS VICINITY MAP AND CORRESPONDING PLAN SET ONLY PERTAIN TO THE OTHER PROJECT COMPONENTS (OPC) PHASE.

LEGEND

- OPC PHASE
- SITES LOCATED IN THE TOLT DAM WATERSHED

DETAIL AND SECTION REFERENCING

4/9 — DETAIL REFERENCE NUMBER; SHEET ON WHICH DETAIL APPEARS

(TITLE) (SCALE) 4/9 — DETAIL REFERENCE NUMBER; SHEET FROM WHICH DETAIL WAS TAKEN

("TYP" SPECIFIES THAT DETAIL IS UNIFORMLY TYPICAL THROUGHOUT PROJECT EXCEPT WHERE OTHERWISE NOTED.)
("VAR" SPECIFIES THAT DETAIL WAS TAKEN FROM SEVERAL SHEETS.)

A A 32 — SECTION A–A IS SHOWN ON SHEET 32.

SECTION A–A 30 — SECTION A–A IS TAKEN FROM SHEET 30.

100% SUBMITTAL (NOT FOR CONSTRUCTION)

VICINITY MAP, NOTE, LEGEND, DETAIL AND SECTION REFERENCING

ADCOMM Engineering LLC

OSBORN CONSULTING INCORPORATED

APPROVED FOR ADVERTISING
LIZ ALZEER
DEPARTMENT OF FINANCE & ADMINISTRATIVE SERVICES
SEATTLE, WASHINGTON . . . . . 20 . . .
BY: . . . . . .
CITY PURCHASING & CONTRACTING SERVICES DIRECTOR

INITIALS AND DATE			INITIALS AND DATE	
DESIGNED	JSG	6/01/22	REVIEWED: DES.	CONST.
CHECKED	DLJ	6/01/22	SDOT	PROJ. MGR.
DRAWN	JAR	6/01/22	RECEIVED	
CHECKED	JSG	6/01/22	REVISED AS BUILT	

ALL WORK SHALL BE DONE IN ACCORDANCE WITH THE CITY OF SEATTLE STANDARD PLANS AND SPECIFICATIONS AND OTHER DOCUMENTS CALLED FOR IN SECTION 0-02.3 OF THE PROJECT MANUAL.

STATE OF WASHINGTON — DONALD P. BLASCHKA — 17853 — REGISTERED PROFESSIONAL ENGINEER

Seattle Public Utilities

ORDINANCE NO. PW NO. 2022-029

SCALE: AS NOTED

TOLT DAM EARLY WARNING SYSTEM – OTHER PROJECT COMPONENTS

CIP PC C115120 CO

VPI # 785-45

G-001

SHEET 1 OF 134

VAULT SERIAL #	DATE	MARK	NATURE REVISIONS	MADE	CHK'D	REV'D
38,384						

C:\pw_pcl_working\jsc\osbornconsulting-pw.bentley.com_osbornconsulting-pw-01\jacob romero\dms26270\G-001.dwg
jacobr May-31-22 11:43am

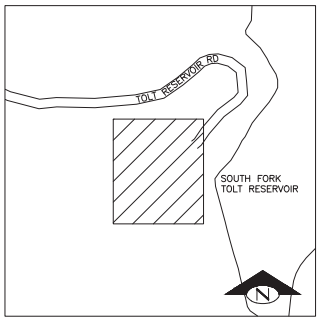

OWS 5

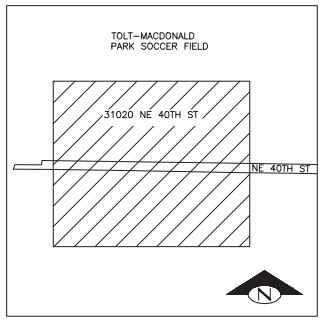

OWS 10

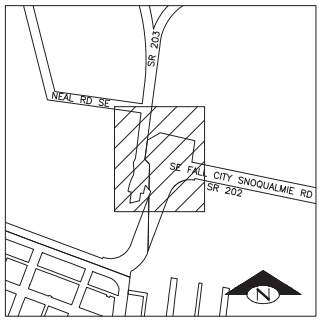

HMS 3

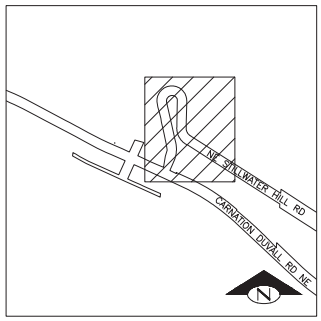

HMS 7

LEGEND

LOCATION MAP

NOTE

1. FOR IP INFORMER INSTALLATION SITE LOCATIONS AND DETAILS, SEE SHEET 124.

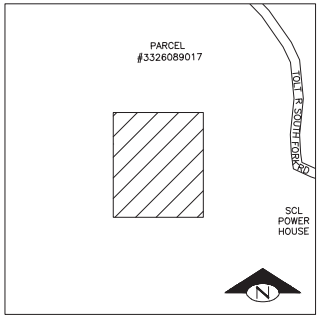

OWS 6

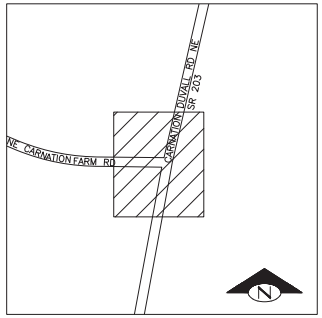

HMS 1

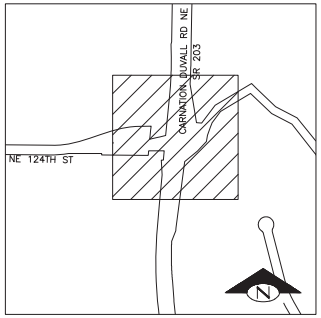

HMS 4

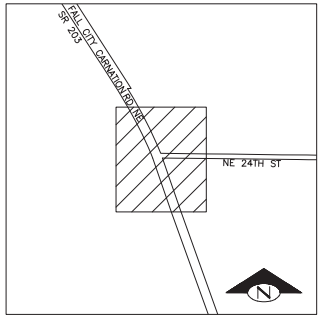

HMS 8

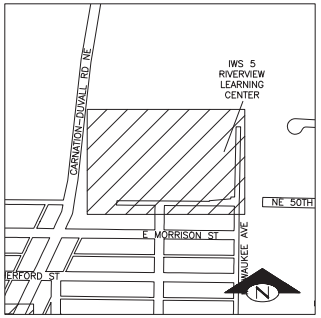

IWS 5

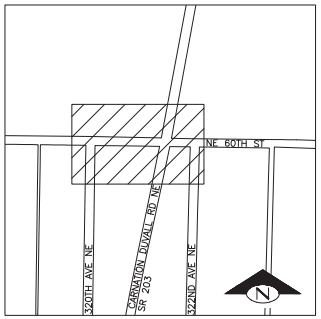

OWS 9

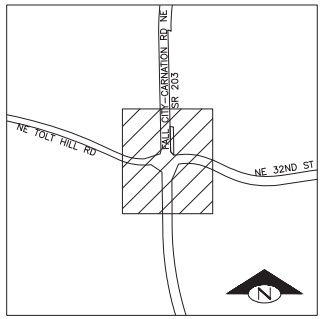

HMS 2

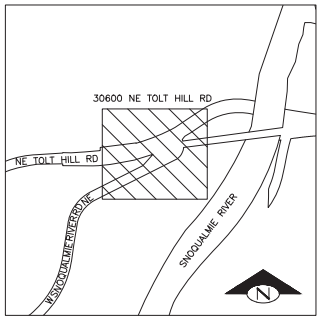

HMS 5

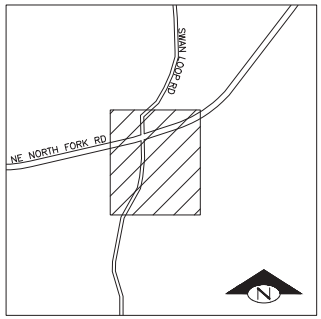

SWAN

OPC LOCATION MAPS

SCALE: 1" = 400'

100% SUBMITTAL (NOT FOR CONSTRUCTION)

LOCATION MAPS

ADCOMM Engineering LLC

OSBORN CONSULTING INCORPORATED

APPROVED FOR ADVERTISING
LIZ ALZEER
DEPARTMENT OF FINANCE & ADMINISTRATIVE SERVICES
SEATTLE, WASHINGTON . . . . . 20 . . .
BY: . . . . . .
CITY PURCHASING & CONTRACTING SERVICES DIRECTOR

INITIALS AND DATE		
DESIGNED	JSG	6/01/22
CHECKED	DLJ	6/01/22
DRAWN	JAR	6/01/22
CHECKED	JSG	6/01/22

INITIALS AND DATE	
REVIEWED:	
DES.	CONST.
SDOT	PROJ. MGR.
RECEIVED	
REVISED AS BUILT	

ALL WORK SHALL BE DONE IN ACCORDANCE WITH THE CITY OF SEATTLE STANDARD PLANS AND SPECIFICATIONS AND OTHER DOCUMENTS CALLED FOR IN SECTION 0-02.3 OF THE PROJECT MANUAL.

STATE OF WASHINGTON · DAVID P. BLASCHKA · 17853 · REGISTERED PROFESSIONAL ENGINEER

Seattle Public Utilities

ORDINANCE NO. PW NO. 2022-029

SCALE: AS NOTED

TOLT DAM EARLY WARNING SYSTEM – OTHER PROJECT COMPONENTS

CBB	PC C115120
	CO
VPI #	785-45
	G-002
SHEET	2 OF 134

VAULT SERIAL #	DATE	MARK	NATURE REVISIONS	MADE	CHK'D	REV'D
38,384						

C:\pw_pcl_workingdir\osbornconsulting-pw.bentley.com_osbornconsulting-pw-01\jscob romero\dms26270\G-002.dwg
jscob May-31-22 11:43am

SHEET INDEX

SHEET #	DWG #	SHEET TITLE
1	G-001	VICINITY MAP, NOTE, LEGEND, DETAIL AND SECTION REFERENCING
2	G-002	LOCATION MAPS
3	G-003	SHEET INDEX
4	G-004	GENERAL NOTES
5	G-005	LEGEND AND ABBREVIATIONS
6	V-101	SURVEY CONTROL – OWS 5
7	V-102	SURVEY CONTROL – OWS 6
8	V-103	SURVEY CONTROL – OWS 9
9	V-104	SURVEY CONTROL – OWS 10
10	V-105	SURVEY CONTROL – HMS 1
11	V-106	SURVEY CONTROL – HMS 2
12	V-107	SURVEY CONTROL – HMS 3_1
13	V-108	SURVEY CONTROL – HMS 3_2
14	V-109	SURVEY CONTROL – HMS 4_1
15	V-110	SURVEY CONTROL – HMS 4_2
16	V-111	SURVEY CONTROL – HMS 5_1
17	V-112	SURVEY CONTROL – HMS 5_2
18	V-113	SURVEY CONTROL – HMS 7
19	V-114	SURVEY CONTROL – HMS 8
20	V-115	EXISTING CONDITIONS – OWS 5
21	V-116	EXISTING CONDITIONS – OWS 6
22	V-117	EXISTING CONDITIONS – OWS 9
23	V-118	EXISTING CONDITIONS – OWS 10
24	V-119	EXISTING CONDITIONS – HMS 1
25	V-120	EXISTING CONDITIONS – HMS 2
26	V-121	EXISTING CONDITIONS – HMS 3
27	V-122	EXISTING CONDITIONS – HMS 4 NE CORNER
28	V-123	EXISTING CONDITIONS – HMS 4 NW CORNER
29	V-124	EXISTING CONDITIONS – HMS 4 SW CORNER
30	V-125	EXISTING CONDITIONS – HMS 5
31	V-126	EXISTING CONDITIONS – HMS 7
32	V-127	EXISTING CONDITIONS – HMS 8
33	V-128	EXISTING CONDITIONS – SWAN 1
34	V-129	EXISTING CONDITIONS – SWAN 2
35	V-130	EXISTING CONDITIONS – SWAN 3
36	V-131	EXISTING CONDITIONS – SWAN 4
37	V-132	EXISTING CONDITIONS – SWAN 5
38	V-133	EXISTING CONDITIONS – SWAN 6
39	V-134	EXISTING CONDITIONS – SWAN 7
40	C-101	SITE PREPARATION – OWS 5
41	C-102	SITE PREPARATION – OWS 6
42	C-103	SITE PREPARATION – OWS 9
43	C-104	SITE PREPARATION – OWS 10
44	C-105	SITE PREPARATION – HMS 1
45	C-106	SITE PREPARATION – HMS 2
46	C-107	SITE PREPARATION – HMS 3
47	C-108	SITE PREPARATION – HMS 4 NE CORNER
48	C-109	SITE PREPARATION – HMS 4 NW CORNER
49	C-110	SITE PREPARATION – HMS 4 SW CORNER
50	C-111	SITE PREPARATION – HMS 5
51	C-112	SITE PREPARATION – HMS 7
52	C-113	SITE PREPARATION – HMS 8
53	C-114	SITE PLAN – OWS 5
54	C-115	SITE PLAN – OWS 6
55	C-116	SITE PLAN – OWS 9
56	C-117	SITE PLAN – OWS 10
57	C-118	SITE PLAN – HMS 1
58	C-119	SITE PLAN – HMS 2
59	C-120	SITE PLAN – HMS 3

SHEET INDEX

SHEET #	DWG #	SHEET TITLE
60	C-121	SITE PLAN – HMS 4 NE CORNER
61	C-122	SITE PLAN – HMS 4 NW CORNER
62	C-123	SITE PLAN – HMS 4 SW CORNER
63	C-124	SITE PLAN – HMS 5
64	C-125	SITE PLAN – HMS 7
65	C-126	SITE PLAN – HMS 8
66	C-127	SITE PLAN – SWAN
67	C-201	SITE DETAILS – 1
68	C-202	SITE DETAILS – 2
69	C-203	SITE DETAILS – 3
70	S-001	STRUCTURAL GENERAL NOTES
71	S-201	HMS 20-FT UTILITY POLE AND FOUNDATION
72	S-202	HMS 20-FT UTILITY POLE ASSEMBLIES
73	S-203	ANCHOR BOLT DETAILS, BILL OF MATERIALS
74	S-204	HMS MOUNTING HEIGHTS AND HANDHOLE PORTS
75	S-301	SPECIAL INSPECTIONS AND STRUCTURAL OBSERVATIONS
76	E-101	FINAL ELECTRICAL PLAN – OWS 5
77	E-102	FINAL ELECTRICAL PLAN – OWS 6
78	E-103	FINAL ELECTRICAL PLAN – OWS 9
79	E-104	FINAL ELECTRICAL PLAN – OWS 10
80	E-105	FINAL ELECTRICAL PLAN – HMS 1-5, 7-8
81	E-106	FINAL ELECTRICAL PLAN – IWS 5_1
82	E-107	FINAL ELECTRICAL PLAN – IWS 5_2
83	E-201	ELECTRICAL DETAILS – OWS 5
84	E-202	ELECTRICAL DETAILS – OWS 6, 9, AND 10
85	E-203	ELECTRICAL DETAILS – HMS
86	T-101	INSTALLATION PLAN – IWS 5
87	T-102	INSTALLATION PLAN – SWAN
88	T-103	INSTALLATION PLAN – SWAN TOWER
89	T-104	INSTALLATION PLAN – SWAN ANTENNA
90	T-105	INSTALLATION PLAN – SWAN EXTERIOR WALL PANEL AND ACTUATOR
91	T-106	INSTALLATION PLAN – SWAN EQUIPMENT ROOM
92	T-107	INSTALLATION PLAN – SWAN TOWER CABLE ROUTING
93	T-108	INSTALLATION PLAN – SWAN BUILDING EXTERIOR CABLE ROUTING
94	T-109	INSTALLATION PLAN – SWAN BUILDING INTERIOR CABLE ROUTING
95	T-110	INSTALLATION PLAN – VISTA HOUSE
96	T-201	IWS SYSTEM DETAILS – 1
97	T-202	IWS SYSTEM DETAILS – 2
98	T-203	OWS SYSTEM DETAILS – 1
99	T-204	OWS SYSTEM DETAILS – 2
100	T-205	OWS SYSTEM DETAILS – 3
101	T-206	OWS SYSTEM DETAILS – 4
102	T-207	OWS SYSTEM DETAILS – 5
103	T-208	OWS SYSTEM DETAILS – 6
104	T-209	OWS SYSTEM DETAILS – 7
105	T-210	MISCELLANEOUS SIREN COMPONENT DETAILS
106	T-211	OWS 5 VISTA HOUSE POLE DETAILS – 1
107	T-212	OWS 5 VISTA HOUSE POLE DETAILS – 2
108	T-213	OWS 5 VISTA HOUSE POLE DETAILS – 3
109	T-214	OWS 5 VISTA HOUSE POLE DETAILS – 4
110	T-215	PERMANENT POLE DETAILS
111	T-216	HMS DETAILS – 1
112	T-217	HMS DETAILS – 2
113	T-218	HMS DETAILS – 3
114	T-219	SWAN – YAGI ANTENNA MOUNTING DETAILS
115	T-220	SWAN – PANEL ANTENNA MOUNTING DETAILS 1
116	T-221	SWAN – PANEL ANTENNA MOUNTING DETAILS 2
117	T-301	SYSTEM DETAIL DIAGRAM – 1
118	T-302	SYSTEM DETAIL DIAGRAM – 2

SHEET INDEX

SHEET #	DWG #	SHEET TITLE
119	T-303	SYSTEM DETAIL DIAGRAM – 3
120	T-304	SYSTEM DETAIL DIAGRAM – 4
121	T-305	SWAN ANTENNA AND CONTROL CABLE DIAGRAM
122	T-306	SWAN POWER AND CONTROL CABLE DIAGRAM
123	T-307	SWAN POWER WIRING DIAGRAM
124	T-308	DESKTOP IP INFORMER INSTALLATION DETAILS
125	X-101	QUALITY CONTROL CHECKLIST – 1
126	X-102	QUALITY CONTROL CHECKLIST – 2
127	TC-001	TRAFFIC CONTROL PLAN – GENERAL NOTES
128	TC-002	TRAFFIC CONTROL PLAN – OWS 9
129	TC-003	TRAFFIC CONTROL PLAN – OWS 10
130	TC-004	TRAFFIC CONTROL PLAN – HMS 1
131	TC-005	TRAFFIC CONTROL PLAN – HMS 2
132	TC-006	TRAFFIC CONTROL PLAN – HMS 3
133	TC-007	TRAFFIC CONTROL PLAN – HMS 4 NW, SW
134	TC-008	TRAFFIC CONTROL PLAN – HMS 8

VAULT SERIAL #	DATE	MARK	NATURE REVISIONS	MADE BY	CHK'D	REV'D
38384						

100% SUBMITTAL (NOT FOR CONSTRUCTION)

SHEET INDEX

ADCOMM Engineering LLC

OSBORN CONSULTING INCORPORATED

APPROVED FOR ADVERTISING
LIZ ALZEER
DEPARTMENT OF FINANCE & ADMINISTRATIVE SERVICES
SEATTLE, WASHINGTON . . . . . 20 . . .

BY: . . . . . .
CITY PURCHASING & CONTRACTING SERVICES DIRECTOR

INITIALS AND DATE		
DESIGNED	JSG	6/01/22
CHECKED	DLJ	6/01/22
DRAWN	JAR	6/01/22
CHECKED	JSG	6/01/22

INITIALS AND DATE	
REVIEWED:	
DES.	CONST.
SDOT	PROJ. MGR.
RECEIVED	
REVISED AS BUILT	

ALL WORK SHALL BE DONE IN ACCORDANCE WITH THE CITY OF SEATTLE STANDARD PLANS AND SPECIFICATIONS AND OTHER DOCUMENTS CALLED FOR IN SECTION 0-02.3 OF THE PROJECT MANUAL.

Seattle Public Utilities

ORDINANCE NO. PW NO. 2022-029

SCALE: NONE

TOLT DAM EARLY WARNING SYSTEM – OTHER PROJECT COMPONENTS

CBB	PC C115120 CO
VPI #	785-45
	G-003
SHEET	3 OF 134

C:\pw_pcl_working\jsc\osbornconsulting-pw.bentley.com_osbornconsulting-pw-01\jacob romero\dms26270\G-003.dwg
jacobr May-31-22 11:43am

ALL LOCATIONS

GENERAL NOTES

1. A COPY OF THE APPROVED PLAN MUST BE ON SITE WHENEVER CONSTRUCTION IS IN PROGRESS.
2. ALL PERMITS FOR WORK MUST BE OBTAINED PRIOR TO THE START OF CONSTRUCTION. CONTRACTOR TO NOTIFY SPU ENGINEER PAJ HWANG AT PAJ.HWANG@SEATTLE.GOV ONCE INITIAL ESC FACILITIES HAVE BEEN INSTALLED.
3. ALL WORK MUST BE PERFORMED IN ACCORDANCE WITH ALL PERMITS INCLUDED IN THE PROJECT MANUAL AND OBTAINED BY THE CONTRACTOR OR THE OWNER.
4. ALL DAMAGE TO INFRASTRUCTURE CAUSED BY THE CONSTRUCTION MUST BE IMMEDIATELY REPORTED TO THE ENGINEER AND REPAIRED AS REQUIRED BY THE ENGINEER.
5. DATUM: NAVD88 AND NAD83 (2011) 2010.00 EPOCH.
6. SURVEYING AND STAKING OF ALL IMPROVEMENTS IN THE PUBLIC RIGHT OF WAY MUST BE DONE IN ACCORDANCE WITH SPECIFICATION SECTION 01 71 23 – FIELD ENGINEERING AND COMPLETED PRIOR TO CONSTRUCTION.
7. THE CONTRACTOR IS RESPONSIBLE FOR REFERENCING AND REPLACING ALL MONUMENTS THAT MAY BE DISTURBED, DESTROYED, OR REMOVED BY THE PROJECT, AND AT LEAST 2 WORKING DAYS PRIOR TO THE WORK, MUST FILE AN APPLICATION FOR PERMIT TO REMOVE OR DESTROY A SURVEY MONUMENT WITH THE WASHINGTON STATE DEPARTMENT OF NATURAL RESOURCES, PURSUANT TO WAC 332–120. THE CONTRACTOR MUST PROVIDE THE ENGINEER AND SPU LAND SURVEY WITH A COPY OF THE APPROVED PERMIT AND COMPLETION REPORT. SEE SPECIFICATION SECTIONS 00 72 00 AND 00 73 00.
8. THE CONTRACTOR MUST LOCATE AND PROTECT ALL CASTINGS AND UTILITIES DURING CONSTRUCTION.
9. THE CONTRACTOR MUST CONTACT THE UNDERGROUND UTILITIES LOCATOR SERVICE (811) AT LEAST 48 HOURS PRIOR TO CONSTRUCTION.
10. ALL EXCAVATION ADJACENT TO UTILITY POLES OR OTHER INSTALLATIONS MUST COMPLY WITH WASHINGTON ADMINISTRATIVE CODE (WAC), SAFETY STANDARDS FOR CONSTRUCTION WORK, PART N. SITE SAFETY PROCEDURES AND EXCAVATION PROTECTIVE SYSTEM MUST SPECIFICALLY COMPLY WITH WAC 296–155–650, EXCAVATION, TRENCHING AND SHORING.
11. THE CONTRACTOR IS RESPONSIBLE FOR DETERMINING THE EXTENT OF ANY HAZARD CREATED BY OVERHEAD POWER. THE CONTRACTOR MUST MEET WITH UTILITY OWNERS PRIOR TO CONSTRUCTION AND MUST TAKE WHATEVER PRECAUTIONS ARE REQUIRED BY LAW AND REGULATIONS, UTILITY OWNERS OR SAFE CONSTRUCTION PRACTICES.
12. FOR LOCATIONS IN THE DRAWINGS WHERE TREES ARE CALLED OUT TO BE PROTECTED IN PLACE, THE CONTRACTOR MUST FOLLOW CITY OF SEATTLE STANDARD PLAN 132a OR 132b.
13. AREAS SPECIFIED TO BE RESTORED WITH MULCH MUST USE ARBORIST WOOD CHIP MULCH PER SPECIAL PROVISION 01 57 13.

STORMWATER AND EROSION CONTROL NOTES

1. THE CONCEPTUAL CONSTRUCTION SEDIMENT AND EROSION CONTROL MEASURES SHOWN ON THIS PLAN ARE THE MINIMUM BMPS FOR ANTICIPATED SITE CONDITIONS DURING THE CONSTRUCTION PERIOD. IF THE CONTRACTOR ADOPTS THIS CONCEPTUAL PLAN, THE CONTRACTOR'S MEANS AND METHODS MUST COMPLY WITH THE PLAN. THE CONTRACTOR MUST KEEP THE PLAN CURRENT IN ACCORDANCE WITH THE JURISDICTION'S REQUIREMENTS EACH SITE IS LOCATED.
2. THE EROSION AND SEDIMENTATION (ESC) CONTROL FACILITIES SHOWN ON THIS PLAN MUST BE CONSTRUCTED PRIOR TO OR IN CONJUNCTION WITH ALL CLEARING AND GRADING SO AS TO ENSURE THAT THE TRANSPORT OF SEDIMENT TO SURFACE WATERS, DRAINAGE SYSTEMS, AND ADJACENT PROPERTIES IS MINIMIZED.
3. THE ESC FACILITIES MUST BE INSPECTED DAILY BY THE CONTRACTOR AND MAINTAINED TO ENSURE CONTINUED PROPER FUNCTIONING. WRITTEN RECORDS MUST BE KEPT OF WEEKLY REVIEWS OF THE ESC FACILITIES.
4. AREAS OF EXPOSED SOILS THAT WILL NOT BE DISTURBED FOR TWO DAYS DURING THE WET SEASON OR SEVEN DAYS DURING THE DRY SEASON MUST BE IMMEDIATELY STABILIZED WITH THE APPROVED ESC COVER METHODS (E.G., SEEDING, MULCHING, PLASTIC COVERING, ETC.).
5. ANY AREA NEEDING ESC MEASURES, NOT REQUIRING IMMEDIATE ATTENTION, SHALL BE ADDRESSED WITHIN TWO (2) DAYS BETWEEN OCTOBER 1 – APRIL 30, OR SEVEN (7) DAYS BETWEEN MAY 1 – SEPTEMBER 30.
6. THE ESC FACILITIES ON INACTIVE SITES MUST BE INSPECTED AND MAINTAINED A MINIMUM OF ONCE A MONTH OR WITHIN 24 HOURS FOLLOWING A STORM EVENT.
7. AT NO TIME SHALL MORE THAN ONE (1) FOOT OF SEDIMENT BE ALLOWED TO ACCUMULATE WITHIN A CATCH BASIN. CATCH BASIN CLEANING OPERATIONS MUST NOT FLUSH SEDIMENT–LADEN WATER INTO THE DOWNSTREAM SYSTEM.
8. PRIOR TO THE BEGINNING OF THE WET SEASON (OCT.1), ALL DISTURBED AREAS MUST BE REVIEWED TO IDENTIFY WHICH ONES CAN BE SEEDED IN PREPARATION FOR THE WINTER RAINS. DISTURBED AREAS MUST BE SEEDED WITHIN ONE WEEK OF THE BEGINNING OF THE WET SEASON.
9. THE CONTRACTOR MUST MINIMIZE VEHICLE TRACKING OF SEDIMENT OFF–SITE. STREET SWEEPING, STREET CLEANING, OR WHEEL WASH/TIRE BATHS MAY BE NECESSARY IF SEDIMENT IS PRESENT ON ADJACENT STREETS, AS DETERMINED BY THE ENGINEER.

WORK IN KING COUNTY

GENERAL NOTES

1. THE KING COUNTY GENERAL NOTES APPLY TO SITES WITHIN KING COUNTY ROW AND ROADWAYS MAINTAINED BY KING COUNTY.
2. THE CONTRACTOR MUST REQUEST A PRECONSTRUCTION CONFERENCE WITH KING COUNTY'S LAND USE DEPARTMENT FOR PROJECT LOCATIONS WITHIN KING COUNTY ROW, OR ROADWAY ROW MAINTAINED BY KING COUNTY. THREE WORKING DAYS PRIOR NOTICE MUST BE PROVIDED TO THE COUNTY AND THE PRECONSTRUCTION CONFERENCE MUST PRECEDE THE BEGINNING OF CONSTRUCTION AND INCLUDE THE APPLICANT, CONTRACTOR, DESIGN ENGINEER, UTILITY REPRESENTATIVES, AND OTHER APPLICABLE PARTICIPANTS. PLAN APPROVALS AND PERMITS MUST BE IN HAND PRIOR TO THE CONFERENCE.
3. THE CONTRACTOR MUST CALL THE KING COUNTY PERMITTING DEPARTMENT INSPECTIONS AT 206–296–6600 TO SCHEDULE TIME FOR A LAND USE INSPECTOR TO BE ON SITE.
4. CONSTRUCTION PERMITS WITHIN KING COUNTY RIGHT OF WAY MAY BE OBTAINED BY CALLING 206–296–7456.
5. BEFORE ANY WORK BEGINS ON KING COUNTY PARKS PROPERTY, THE CONTRACTOR MUST CONTACT KING COUNTY DISTRICT COORDINATOR MARK THIERY AT 206–423–5659 OR MARK.THIERY@KINGCOUNTY.GOV AND ANDY BOLAND AT ANDY.BOLAND@KINGCOUNTY.GOV.
6. THE CONTRACTOR IS RESPONSIBLE FOR INTERIM TRAFFIC CONTROL DURING CONSTRUCTION AND MUST SUBMIT A TRAFFIC CONTROL PLAN TO THE KING COUNTY DEVELOPMENT ENGINEER PRIOR TO BEGINNING WORK. TRAFFIC CONTROL MUST FOLLOW THE GUIDELINES OF SECTION 1–07.23 OF THE WSDOT/APWA STANDARD SPECIFICATIONS. ALL BARRICADES, SIGNS AND FLAGGING MUST CONFORM TO THE REQUIREMENTS OF THE MUTCD MANUAL PER KING COUNTY ROAD DESIGN AND CONSTRUCTION STANDARDS.
7. GROUND SURFACES DISTURBED DURING CONSTRUCTION MUST BE RESTORED IN KIND PER THE COVER MEASURES IN APPENDIX D OF THE KING COUNTY SURFACE WATER DESIGN MANUAL PER THE SPECIAL PROVISIONS.
8. THE CONTRACTOR IS RESPONSIBLE FOR TRIMMING TREES FOR OVERHEAD CLEARANCE; THIS MUST BE COORDINATED WITH THE KING COUNTY INSPECTOR ASSIGNED TO THE PROJECT.

STORMWATER AND EROSION CONTROL NOTES

1. COVER MEASURES WILL BE APPLIED IN CONFORMANCE WITH APPENDIX D OF THE KING COUNTY SURFACE WATER DESIGN MANUAL.
2. THE CONTRACTOR MUST FOLLOW THE KING COUNTY SURFACE WATER DESIGN MANUAL FOR EROSION AND SEDIMENT CONTROL BMP MEASURES.
3. THE CONTRACTOR MUST PROVIDE AT LEAST ONE WORKING DAY NOTICE PRIOR TO INITIAL SITE WORK INVOLVING INSTALLATION OF TEMPORARY EROSION AND SEDIMENT CONTROL MEASURES.

WORK IN CITY OF SEATTLE OR TOLT DAM WATERSHED

GENERAL NOTES

1. THE CITY OF SEATTLE GENERAL NOTES APPLY TO PROJECT SITES WITHIN THE CITY OF SEATTLE AND TOLT DAM AREA SITES.
2. ALL DISTURBED SOILS MUST BE AMENDED PER CITY OF SEATTLE STANDARD PLAN 142 AND SECTION 8–02 OF THE STANDARD SPECIFICATIONS UNLESS WITHIN ONE FOOT OF A CURB OR SIDEWALK, THREE FEET OF A UTILITY STRUCTURE (E.G., WATER METER, UTILITY POLE, HAND HOLE, ETC.) OR THE DRIPLINE OF AN EXISTING TREE.

STORMWATER AND EROSION CONTROL NOTES

1. SUBMIT A CONSTRUCTION STORMWATER AND EROSION CONTROL PLAN (CSECP) AND SPILL PLAN (SP) IN ACCORDANCE WITH SPECIFICATION SECTION 01 57 13.
2. THE CONCEPTUAL CSEC MEASURES SHOWN ON THIS PLAN ARE THE MINIMUM BMPS FOR ANTICIPATED SITE CONDITIONS DURING THE CONSTRUCTION PERIOD. IF THE CONTRACTOR ADOPTS THIS CONCEPTUAL CSEC PLAN, THE CONTRACTOR'S MEANS AND METHODS MUST COMPLY WITH THE PLAN. THE CONTRACTOR MUST KEEP THE PLAN CURRENT IN ACCORDANCE WITH SPECIFICATION SECTION 01 57 13.
3. PROTECT TREES AND VEGETATION PER SPECIFICATION SECTION 01 76 00.

WORK IN WSDOT R/W

GENERAL NOTES

1. ALL MATERIALS AND WORKMANSHIP MUST BE IN ACCORDANCE WITH THE REQUIREMENTS OF THE STATE OF WASHINGTON, DEPARTMENT OF TRANSPORTATION (WSDOT), STANDARD SPECIFICATIONS FOR ROAD, BRIDGE, AND MUNICIPAL CONSTRUCTION, CURRENT EDITION.
2. TRAFFIC CONTROL SIGNS MUST BE REMOVED AT THE END OF EACH WEEK WORK DAY IF NOT APPLICABLE AFTER CONSTRUCTION HOURS. ALL NECESSARY TRAFFIC CONTROL DEVICES MUST BE IN PLACE PRIOR TO THE BEGINNING OF CONSTRUCTION.

VAULT SERIAL #	DATE	MARK	NATURE REVISIONS	MADE	CHK'D	REV'D
58,584						

100% SUBMITTAL (NOT FOR CONSTRUCTION)

GENERAL NOTES

ADCOMM Engineering LLC — Bridging The Gap Between Operations & & Technology®

OSBORN CONSULTING INCORPORATED

APPROVED FOR ADVERTISING
LIZ ALZEER
DEPARTMENT OF FINANCE & ADMINISTRATIVE SERVICES
SEATTLE, WASHINGTON . . . . . 20 . . .

BY: . . . . . .
CITY PURCHASING & CONTRACTING SERVICES DIRECTOR

INITIALS AND DATE		
DESIGNED	JSG	6/01/22
CHECKED	DLJ	6/01/22
DRAWN	AKS	6/01/22
CHECKED	JSG	6/01/22

INITIALS AND DATE	
REVIEWED:	
DES.	CONST.
SDOT	PROJ. MGR.
RECEIVED	
REVISED AS BUILT	

ALL WORK SHALL BE DONE IN ACCORDANCE WITH THE CITY OF SEATTLE STANDARD PLANS AND SPECIFICATIONS AND OTHER DOCUMENTS CALLED FOR IN SECTION 0–02.3 OF THE PROJECT MANUAL.

STATE OF WASHINGTON — JOSEPH P. BLASCHA — 17853 — REGISTERED PROFESSIONAL ENGINEER

Seattle Public Utilities

ORDINANCE NO. PW NO. 2022–029

SCALE: NONE

TOLT DAM EARLY WARNING SYSTEM – OTHER PROJECT COMPONENTS

CIP	PC CO	C115120
VPI #	785–45	
G-004		
SHEET	4	OF 134

C:\pw_pcl_working\jsc\osbornconsulting-pw.bentley.com__osbornconsulting-pw-01\jacob romero\dms26270\G-004.dwg
jacobr May-31-22 11:44am

EXISTING LEGEND

- PROPERTY BOUNDARY
- RIGHT–OF–WAY LINES
- RIGHT–OF–WAY CENTERLINE
- TEB — TELEPHONE ENCLOSURE
- DITCH
- WOOD FENCE
- COMMUNICATIONS CONDUIT
- OHP — OVERHEAD POWER
- BURIED POWER
- OHWM — ORDINARY HIGH WATER LINE
- CONIFEROUS TREE
- DECIDUOUS TREE
- SURVEY MONUMENT IN CASE
- SIGN
- PP — POWER POLE
- ROCKERY
- ANCHOR
- PRIVATE MAIL BOX
- TACK/LEAD, TACK PK NAIL, SPIKE (FOUND OR SET)
- HUB/TACK (FOUND OR SET)

ABBREVIATIONS

APS	APPLIED PROFESSIONAL SERVICES
APWA	AMERICAN PUBLIC WORKS ASSOCIATION
ASPH	ASPHALT
AWG	AMERICAN WIRE GAGE
BLRD	BOLLARD
CAB	CABINET
CCB	CLIMATE CONTROL BUILDING
C&G	CURB & GUTTER
CL	CENTERLINE
COAX	COAXIAL
CONC	CONCRETE
COS	CITY OF SEATTLE
CSECP	CONSTRUCTION STORMWATER EROSION CONTROL PLAN
CTREE	CIRCUMFERENCE OF TREE
CW	CONCRETE WALK
CY	CUBIC YARD
DC	DIRECT CURRENT
DTREE	DIAMETER OF TREE
DWY	DRIVEWAY
E	EASTING
EAS	EMERGENCY ALERT SYSTEM
ECB	ELECTRICAL CABLE
ECD	ELECTRICAL CONDUIT
EHH	ELECTRICAL HANDHOLE
ELEV	ELEVATION
EQUIP	EQUIPMENT
ESC	EROSION AND SEDIMENT CONTROL
EX	EXISTING
FCC	FEDERAL COMMUNICATIONS COMMISION
FERC	FEDERAL ENERGY REGULATORY COMMISION
FHWA	FEDERAL HIGHWAY ADMINISTRATION
FD	FOUND
FT	FEET
GND	GROUND
GRN	GREEN
GRVL	GRAVEL
GUI	GRAPHICAL USER INTERFACE
H	HEIGHT
HMS	HIGHWAY MESSAGE SIGN
HP	HIGH POWER
IE	INVERT ELEVATION
IP	INTERNET PROTOCOL
IT	INFORMATION TECHNOLOGY
IWS	INDOOR WARNING SYSTEM
L	LENGTH
LP	LIGHT POLE
MB	MAILBOX
MIN	MINIMUM
MUTCD	MANUAL ON UNIFORM TRAFFIC CONTROL DEVICES
MW	MICROWAVE
N	NORTHING
NAD83	NORTH AMERICAN DATUM OF 1983
NAVD88	NORTH AMERICAN VERTICAL DATUM OF 1988
NE	NORTHEAST
NEC	NATIONAL ELECTRICAL CODE
NOC	NORTH OPERATIONS CENTER
NTS	NOT TO SCALE
NW	NORTHWEST
OC	ON CENTER
OCC	OPERATIONS CONTROL CENTER
OHP	OVERHEAD POWER
OHWM	ORDINARY HIGH WATER MARK
OPC	OTHER PROJECT COMPONENTS
OTB	OUTDOOR TREATMENT BUILDING
OWS	OUTDOOR WARNING SYSTEM
PA	PASSIVE ANTENNA
PM	PROJECT MANAGER
PP	POWER POLE
PSE	PUGET SOUND ENERGY
PSERN	PUGET SOUND EMERGENCY RADIO NETWORK
RD	ROAD
RET	RETAINING
RFS	RADIO FREQUENCY SYSTEMS
R/W	RIGHT OF WAY
SCADA	SUPERVISORY CONTROL AND DATA ACQUISITION
SCHD	SCHEDULE
SCL	SEATTLE CITY LIGHT
SNMP	SIMPLE NETWORK MANAGEMENT PROTOCOL
SONET	SYNCHRONOUS OPTICAL NETWORK
SP	SPILL PLAN
SPU	SEATTLE PUBLIC UTILITIES
SR	STATE ROUTE
SRP	SIREN REPLACE PROJECT
SSWR	SANITARY SEWER
ST	STREET
SW	SOUTHWEST
TCB	TELEPHONE CABLE
TEB	TELEPHONE ENCLOSURE BOX
TX	TRANSMISION
UHF	ULTRA HIGH FREQUENCY
UL	UNDERWRITER'S LABORATORIES
UPS	UNINTERRUPTIBLE POWER SUPPLY
UVRI	ULTRAVOICE® REMOTE INTERFACE
V	VALVE
VAC	VOLTS OF ALTERNATING CURRENT
VDC	VOLTS DIRECT CURRENT
VHF	VERY HIGH FREQUENCY
VLT	VAULT
VMS	VARIABLE MESSAGE SIGNS
W	WIDTH
WAC	WASHINGTON ADMINISTRATIVE CODE
WF	WOOD FENCE
WSDOT	WASHINGTON DEPARTMENT OF TRANSPORTATION

*FOR OTHER ABBREVIATIONS, SEE CITY OF SEATTLE STANDARD PLAN 002

VAULT SERIAL #	DATE	MARK	NATURE	MADE	CHK'D	REV'D
SS364			REVISIONS			

C:\pw_pcl_workingdir\osbornconsulting-pw.bentley.com_osbornconsulting-pw-01\jacob romero\dms26270\G-005.dwg
jacobr May-31-22 11:44am

100% SUBMITTAL (NOT FOR CONSTRUCTION)

LEGEND AND ABBREVIATIONS

ADCOMM Engineering LLC — Bridging Pre-Gap Between Operations & Technology®

OSBORN CONSULTING INCORPORATED

APPROVED FOR ADVERTISING
LIZ ALZEER
DEPARTMENT OF FINANCE & ADMINISTRATIVE SERVICES
SEATTLE, WASHINGTON . . . . . 20 . . .

BY: . . . . . .
CITY PURCHASING & CONTRACTING SERVICES DIRECTOR

INITIALS AND DATE		
DESIGNED	JSG	6/01/22
CHECKED	DLJ	6/01/22
DRAWN	AKS	6/01/22
CHECKED	JSG	6/01/22

INITIALS AND DATE	
REVIEWED:	
DES.	CONST.
SDOT	PROJ. MGR.
RECEIVED	
REVISED AS BUILT	

ALL WORK SHALL BE DONE IN ACCORDANCE WITH THE CITY OF SEATTLE STANDARD PLANS AND SPECIFICATIONS AND OTHER DOCUMENTS CALLED FOR IN SECTION 0-02.3 OF THE PROJECT MANUAL.

STATE OF WASHINGTON — JOSEPH D. BLASCHA — 17853 — REGISTERED PROFESSIONAL ENGINEER

Seattle Public Utilities

ORDINANCE NO. PW NO. 2022-029

SCALE: NONE

TOLT DAM EARLY WARNING SYSTEM – OTHER PROJECT COMPONENTS

CIP	PC CO	C115120
VPI #	785–45	
G-005		
SHEET	5 OF 134	

PROJECT NUMBER: C115120 DESIGN 30%

PROJECT NAME: TOLT DAM WARNING SYSTEM – OWS #5

SURVEY PROJECT FOLDER NUMBER: 261–1398

REFERENCE DOCUMENTS:

DATE: 07–09–2021

PRJ. SURVEYOR: R. BYARLAY

PRIMARY CREW: B. REYES

OFFICE TECH: G. HARRIS

R/W CREATED BY: R. BYARLAY

GEOREGISTRATION NOTES:
SEC 32, T26N, R09E (KING COUNTY)

HORIZONTAL DATUM: NAD83–2011 EPOCH 2010.00 DERIVED FROM THE WSRN AND NGS CORS

VERTICAL DATUM: NAVD88

BASIS OF BEARING: WASHINGTON STATE PLANE COORDINATE SYSTEM, NORTH ZONE

VERTICAL BENCHMARKS:
CP #11

PROJECT FIELD BOOK:
#4096 PGS 42–43

PROJECT SCALE FACTOR: 0.999969363

CONVERGENCE ANGLE: –0°38'13.8"

PROJECT COMBINED GRID FACTOR:
0.999887938

SCALE FACTOR BASIS:
NORTHING: 254613.218
EASTING: 1429663.09

NOTES:
FIELD MEASUREMENTS FOR THIS SURVEY PERFORMED WITH A 3" TRIMBLE TOTAL STATION USING TRAVERSE METHODS THAT MEET OR EXCEED ACCURACY REQUIREMENTS CONTAINED IN WAC 332.130.090.

THIS SURVEY WAS CONDUCTED WITHOUT THE BENEFIT OF A CURRENT TITLE REPORT AND THEREFORE DOES NOT CLAIM TO SHOW ALL EASEMENTS OR RESTRICTIONS OF RECORD, IF ANY.

BENCHMARKS:

CP #11 –FND IRON PIPE
ELEV=1774.05'

SURVEY MONUMENTATION:
WHEN PROPOSED CONSTRUCTION, CHANGES TO PROPOSED CONSTRUCTION, OR OTHER ACTIVITY REQUIRES REMOVAL OR DESTRUCTION OF A SURVEY MONUMENT, AT LEAST 2 WORKING DAYS PRIOR TO THIS WORK, THE CONTRACTOR MUST PROVIDE THE ENGINEER WITH A COPY THE DEPARTMENT OF NATURAL RESOURCES (DNR) PERMIT AUTHORIZING THE REMOVAL OR DESTRUCTION OF THE SURVEY MONUMENT PER WAC 332–120.
REMOVAL OR DESTRUCTION IS DEFINED TO MEAN THE PHYSICAL DISTURBANCE OR COVERING OF A SURVEY MONUMENT SUCH THAT THE SURVEY POINT IS NO LONGER VISIBLE OR READILY ACCESSIBLE.
BEFORE PHYSICAL COMPLETION, THE CONTRACTOR MUST PROVIDE THE ENGINEER A COPY OF THE DNR FINAL REPORT FORM WITH EVIDENCE THAT EACH SURVEY MONUMENT HAS BEEN REPLACED OR RESTORED TO ITS PRE–CONSTRUCTION POSITION. FOR PERMITTING INFORMATION SEE
HTTP://WWW.DNR.WA.GOV/PUBLICATIONS/ENG_PLSO_REMOVE_DESTROY_MONUMENT.ZIP
OR CALL DNR AT (360) 902–1230.
AT THE TIME THE PERMITS ARE PROVIDED TO THE ENGINEER, THE CONTRACTOR MUST FORWARD A COPY OF THIS INITIAL DNR PERMIT WITH AUTHORIZING SIGNATURES AND FINAL REPORT FORM TO THE LAND SURVEY MANAGER, SEATTLE PUBLIC UTILITIES, PHYSICAL ADDRESS: SEATTLE MUNICIPAL TOWER, 700 FIFTH AVENUE, OR MAILING ADDRESS: PO BOX 34018, SEATTLE, WA 98124–4018.

Primary Survey Control Table				
Point #	Northing	Easting	Elevation	Description
11	254613.22	1429663.09	1774.05	IP 38910702
12	254121.60	1429679.03	1777.87	MIC TD07
15	254614.25	1429411.79	1800.87	SPK
16	254513.84	1429376.89	1804.18	SPK

OWS 5

N

50 25 0 50 100
SCALE IN FEET

VAULT SERIAL #	DATE	MARK	NATURE REVISIONS	MADE	CHK'D	REV'D

C:\pw_pci_workingdir\osbornconsulting-pw.bentley.com_osbornconsulting-pw-01\jacob romero\dms26270\V-101.dwg
jacobr May-31-22 11:44am

100% SUBMITTAL (NOT FOR CONSTRUCTION)

SURVEY CONTROL – OWS 5

APPROVED FOR ADVERTISING
LIZ ALZEER
DEPARTMENT OF FINANCE & ADMINISTRATIVE SERVICES
SEATTLE, WASHINGTON . . . . . 20 . . .

BY: . . . . . .
CITY PURCHASING & CONTRACTING SERVICES DIRECTOR

INITIALS AND DATE		INITIALS AND DATE	
DESIGNED	6/01/22	REVIEWED: DES.	CONST.
CHECKED	6/01/22	SDOT	PROJ. MGR.
DRAWN	6/01/22	RECEIVED	
CHECKED	6/01/22	REVISED AS BUILT	

ALL WORK SHALL BE DONE IN ACCORDANCE WITH THE CITY OF SEATTLE STANDARD PLANS AND SPECIFICATIONS AND OTHER DOCUMENTS CALLED FOR IN SECTION 0–02.3 OF THE PROJECT MANUAL.

CHRISTOPHER S. ROYAL
STATE OF WASHINGTON
36809
REGISTERED PROFESSIONAL LAND SURVEYOR

Seattle Public Utilities

ORDINANCE NO. PW NO. 2022–029

SCALE: 1"=50'

TOLT DAM EARLY WARNING SYSTEM – OTHER PROJECT COMPONENTS

CBB PC C115120
CO
VPI # 785–45
V-101
SHEET 6 OF 134

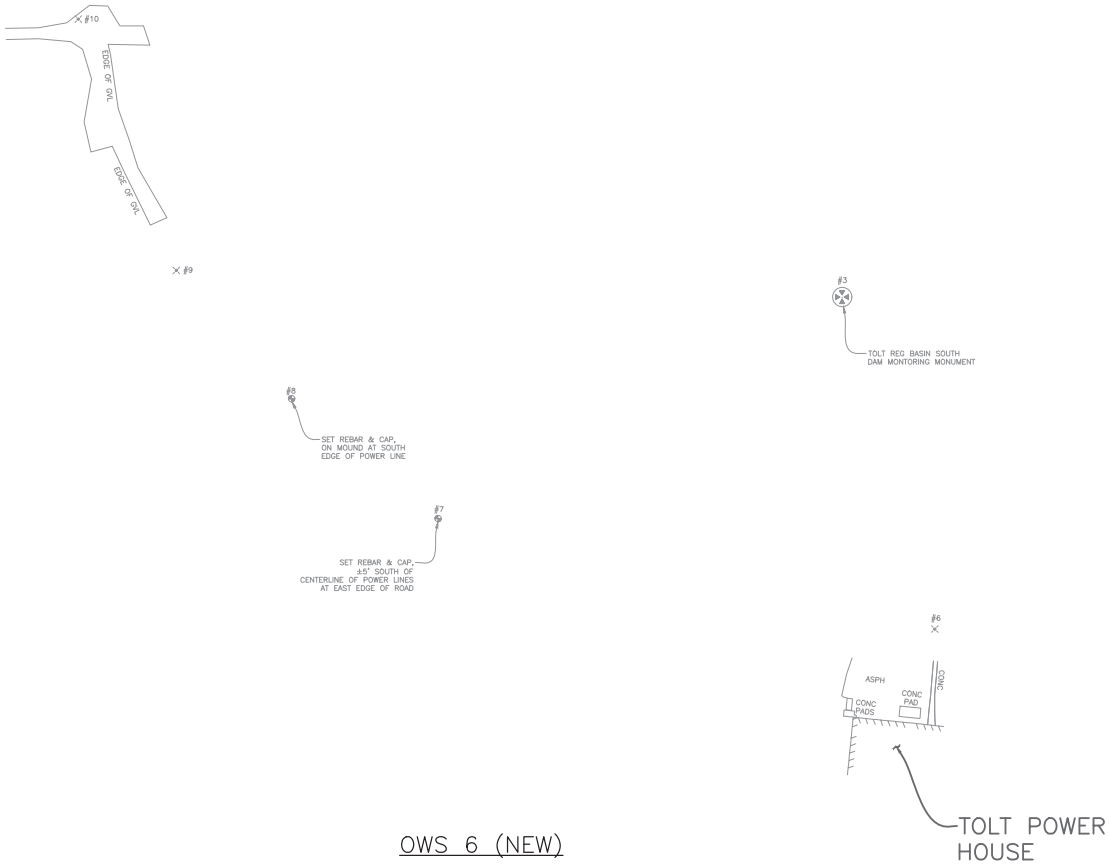

Primary Survey Control Table				
Point #	Northing	Easting	Elevation	Description
1	258225.26	1404570.00	772.53	MIC RBW3
2	258345.02	1404777.97	775.81	MON KC AS-204
3	256882.44	1406449.42	772.61	MIC RBS4
4	257331.04	1406846.08	781.86	PED 3
6	256615.27	1406524.10	780.27	MAG 40861201
7	256704.09	1406124.14	785.04	RC 41105701
8	256800.52	1406006.27	810.53	RC 41105702
9	256903.90	1405913.55	847.50	SPK 41201301
10	257106.18	1405834.63	835.81	SPK 41201302

PROJECT NUMBER: C115120 DESIGN 30

PROJECT NAME: TOLT DAM WARNING SYSTEM – OWS #7B

SURVEY PROJECT FOLDER NUMBER: 261-1398

DATE: 10/01/2021

PRJ. SURVEYOR: R. BYARLAY

PRIMARY CREW: R. BYARLAY, H. EASTMAN, N. RASMUSSEN, D. McNEIL

OFFICE TECH: G. HARRIS

R/W CREATED BY: NO RWAY FOR SITE

GEOREGISTRATION NOTES:
NE 1/4 OF SEC 33, T26N, R08E

HORIZONTAL DATUM: NAD83-2011 EPOCH 2010.00 DERIVED FROM THE WSRN AND NGS CORS

VERTICAL DATUM: NAVD88

BASIS OF BEARING: WASHINGTON STATE PLANE COORDINATE SYSTEM, NORTH ZONE

VERTICAL BENCHMARKS: CP #3

PROJECT FIELD BOOK:
#4086 PG 12, #4110 PG 57, #4120 #13-15

PROJECT SCALE FACTOR:
0.9999886672

CONVERGENCE ANGLE:
-0°42'26.7"

PROJECT COMBINED GRID FACTOR:
0.9999351789

SCALE FACTOR BASIS:
NORTHING: 256882.44
EASTING: 1406449.42

NOTES:

– FIELD MEASUREMENTS FOR THIS SURVEY PERFORMED WITH A 3" TRIMBLE TOTAL STATION USING TRAVERSE METHODS THAT MEET OR EXCEED ACCURACY REQUIREMENTS CONTAINED IN WAC 332.130.090.

– THIS SURVEY WAS CONDUCTED WITHOUT THE BENEFIT OF A CURRENT TITLE REPORT AND THEREFORE DOES NOT CLAIM TO SHOW ALL EASEMENTS OR RESTRICTIONS OF RECORD, IF ANY.

– NO UNDERGROUND GAS IN THIS AREA.

BENCHMARKS:

CP #3 – FND TOLT REG BASIN SOUTH DAM MONTORING MONUMENT, "RBS4"
ELEV= 772.61'

SURVEY MONUMENTATION:
WHEN PROPOSED CONSTRUCTION, CHANGES TO PROPOSED CONSTRUCTION, OR OTHER ACTIVITY REQUIRES REMOVAL OR DESTRUCTION OF A SURVEY MONUMENT, AT LEAST 2 WORKING DAYS PRIOR TO THIS WORK, THE CONTRACTOR MUST PROVIDE THE ENGINEER WITH A COPY THE DEPARTMENT OF NATURAL RESOURCES (DNR) PERMIT AUTHORIZING THE REMOVAL OR DESTRUCTION OF THE SURVEY MONUMENT PER WAC 332-120. REMOVAL OR DESTRUCTION IS DEFINED TO MEAN THE PHYSICAL DISTURBANCE OR COVERING OF A SURVEY MONUMENT SUCH THAT THE SURVEY POINT IS NO LONGER VISIBLE OR READILY ACCESSIBLE. BEFORE PHYSICAL COMPLETION, THE CONTRACTOR MUST PROVIDE THE ENGINEER A COPY OF THE DNR FINAL REPORT FORM WITH EVIDENCE THAT EACH SURVEY MONUMENT HAS BEEN REPLACED OR RESTORED TO ITS PRE-CONSTRUCTION POSITION. FOR PERMITTING INFORMATION SEE HTTP://WWW.DNR.WA.GOV/PUBLICATIONS/ENG_PLSO_REMOVE_DESTROY_MONUMENT.ZIP OR CALL DNR AT (360) 902-1230.
AT THE TIME THE PERMITS ARE PROVIDED TO THE ENGINEER, THE CONTRACTOR MUST FORWARD A COPY OF THIS INITIAL DNR PERMIT WITH AUTHORIZING SIGNATURES AND FINAL REPORT FORM TO THE LAND SURVEY MANAGER, SEATTLE PUBLIC UTILITIES, PHYSICAL ADDRESS: SEATTLE MUNICIPAL TOWER, 700 FIFTH AVENUE, OR MAILING ADDRESS: PO BOX 34018, SEATTLE, WA 98124-4018.

VAULT SERIAL #	DATE	MARK	NATURE REVISIONS	MADE	CHK'D	REV'D

C:\pw_pci_working\8\osbornconsulting-pw.bentley.com__osbornconsulting-pw-01\jacob.romero\dms26270\V-102.dwg
jacobr May-31-22 11:14am

100% SUBMITTAL (NOT FOR CONSTRUCTION)

SURVEY CONTROL – OWS 6

APPROVED FOR ADVERTISING
LIZ ALZEER
DEPARTMENT OF FINANCE & ADMINISTRATIVE SERVICES
SEATTLE, WASHINGTON . . . . . 20 . . .

BY: . . . . . .
CITY PURCHASING & CONTRACTING SERVICES DIRECTOR

INITIALS AND DATE		INITIALS AND DATE	
DESIGNED	6/01/22	REVIEWED: DES.	CONST.
CHECKED	6/01/22	SDOT	PROJ. MGR.
DRAWN	6/01/22	RECEIVED	
CHECKED	6/01/22	REVISED AS BUILT	

ALL WORK SHALL BE DONE IN ACCORDANCE WITH THE CITY OF SEATTLE STANDARD PLANS AND SPECIFICATIONS AND OTHER DOCUMENTS CALLED FOR IN SECTION 0-02.3 OF THE PROJECT MANUAL.

CHRISTOPHER S. ROYAL STATE OF WASHINGTON 38809 PROFESSIONAL LAND SURVEYOR

Seattle Public Utilities

ORDINANCE NO. PW NO. 2022-029

SCALE: 1"=50'

TOLT DAM EARLY WARNING SYSTEM – OTHER PROJECT COMPONENTS

JOB PC C115120 CO

VPI # 785-45

V-102

SHEET 7 OF 134

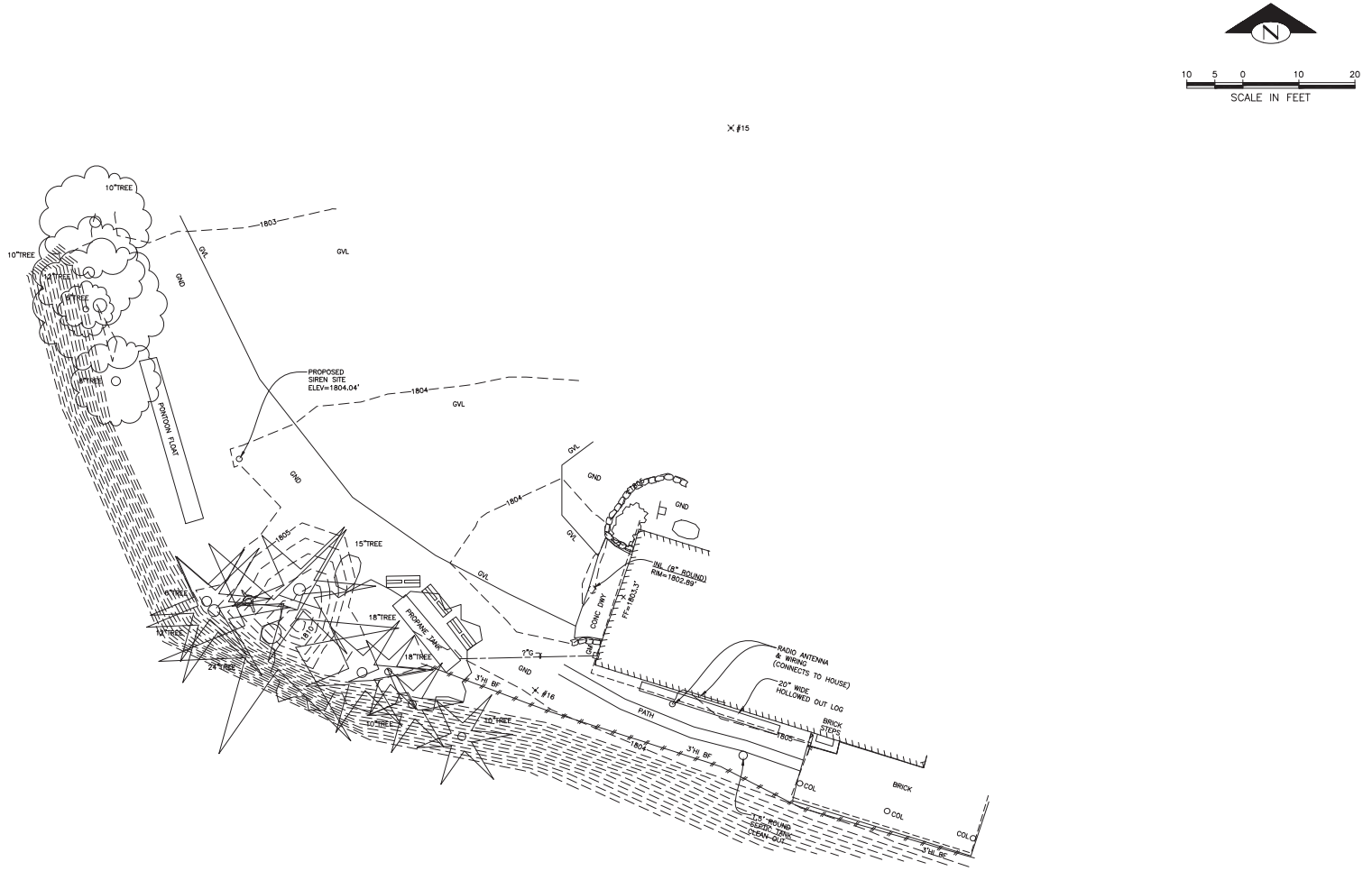

VAULT SERIAL #	DATE	MARK	NATURE	MADE	CHK'D	REV'D
38,384			REVISIONS			

C:\pw_ocs_working\jacobcr\osborneconsulting-pw.bentley.com_osborneconsulting-pw-01\jacob romero\dms26270\V-115.dwg
jacobr May-31-22 11:46am

100% SUBMITTAL (NOT FOR CONSTRUCTION)

EXISTING CONDITIONS – OWS 5

APPROVED FOR ADVERTISING
LIZ ALZEER
DEPARTMENT OF FINANCE & ADMINISTRATIVE SERVICES
SEATTLE, WASHINGTON . . . . . 20 . . .

BY: . . . . . .
CITY PURCHASING & CONTRACTING SERVICES DIRECTOR

INITIALS AND DATE		INITIALS AND DATE	
DESIGNED	6/01/22	REVIEWED: DES.	CONST.
CHECKED	6/01/22	SDOT	PROJ. MGR.
DRAWN	6/01/22	RECEIVED	
CHECKED	6/01/22	REVISED AS BUILT	

ALL WORK SHALL BE DONE IN ACCORDANCE WITH THE CITY OF SEATTLE STANDARD PLANS AND SPECIFICATIONS AND OTHER DOCUMENTS CALLED FOR IN SECTION 0-02.3 OF THE PROJECT MANUAL.

CHRISTOPHER S. ROYAL
STATE OF WASHINGTON
36809
PROFESSIONAL ENGINEER
PROFESSIONAL LAND SURVEYOR

Seattle Public Utilities

ORDINANCE NO. PW NO. 2022-029

SCALE: 1"=10'

TOLT DAM EARLY WARNING SYSTEM – OTHER PROJECT COMPONENTS

CDB PC C115120
CO
VPI # 785-45
V-115
SHEET 20 OF 134

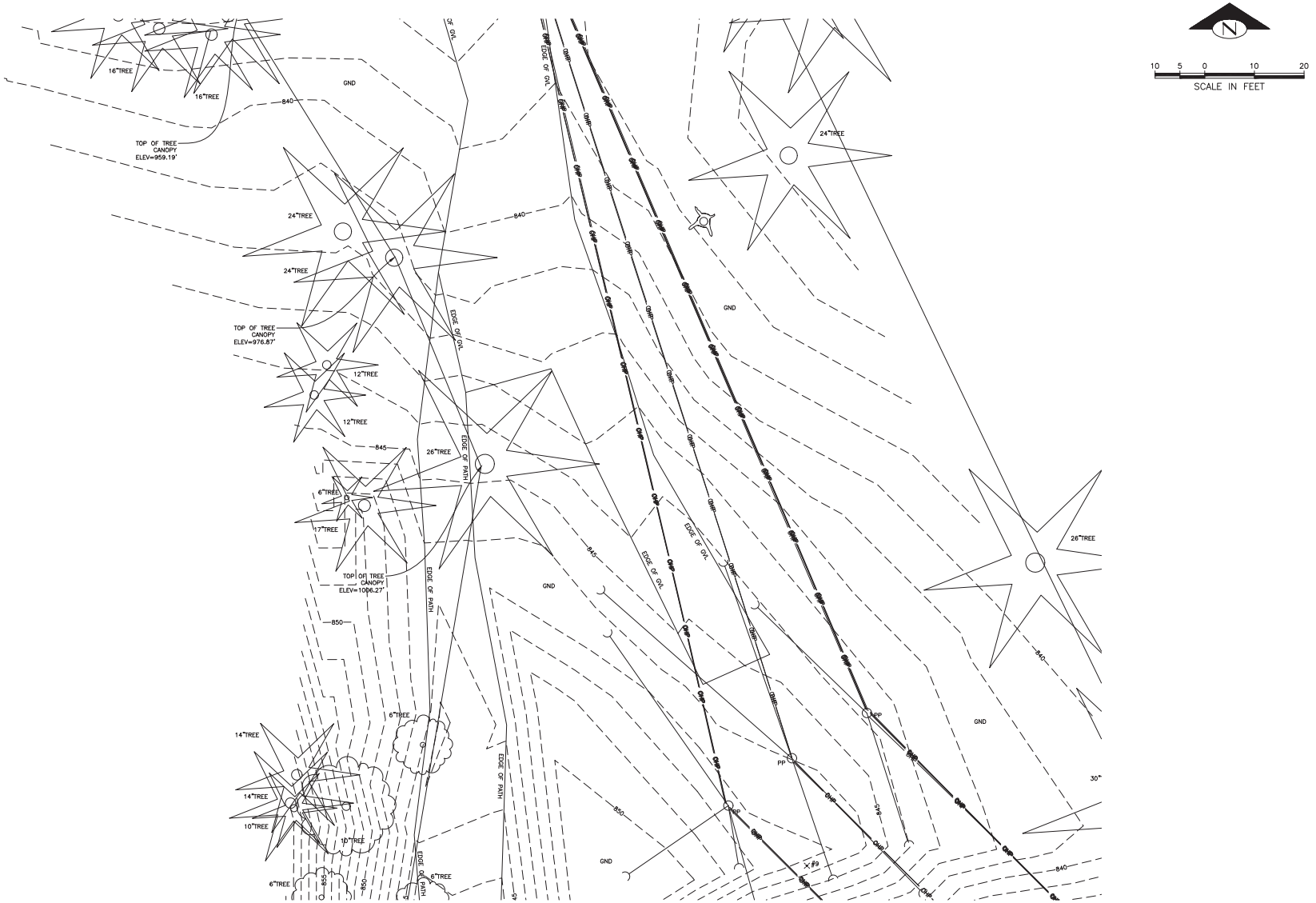

VAULT SERIAL #	DATE	MARK	NATURE	MADE	CHK'D	REV'D
38,384			REVISIONS			

C:\pw_pci_working\8\osbornconsulting-pw-01\jacob romero\dms26270\V-116.dwg
jacobr May-31-22 11:46am

100% SUBMITTAL (NOT FOR CONSTRUCTION)

EXISTING CONDITIONS – OWS 6

APPROVED FOR ADVERTISING
LIZ ALZEER
DEPARTMENT OF FINANCE & ADMINISTRATIVE SERVICES
SEATTLE, WASHINGTON . . . . . 20 . . .

BY: . . . . . .
CITY PURCHASING & CONTRACTING SERVICES DIRECTOR

INITIALS AND DATE		INITIALS AND DATE	
DESIGNED	6/01/22	REVIEWED: DES.	CONST.
CHECKED	6/01/22	SDOT	PROJ. MGR.
DRAWN	6/01/22	RECEIVED	
CHECKED	6/01/22	REVISED AS BUILT	

ALL WORK SHALL BE DONE IN ACCORDANCE WITH THE CITY OF SEATTLE STANDARD PLANS AND SPECIFICATIONS AND OTHER DOCUMENTS CALLED FOR IN SECTION 0-02.3 OF THE PROJECT MANUAL.

CHRISTOPHER S. ROYAL STATE OF WASHINGTON 36809 REGISTERED PROFESSIONAL ENGINEER

Seattle Public Utilities

ORDINANCE NO. PW NO. 2022-029

SCALE: 1"=10'

TOLT DAM EARLY WARNING SYSTEM – OTHER PROJECT COMPONENTS

CBB	PC C115120
	CO
VPI #	785-45
	V-116
SHEET	21 OF 134

VIEW OF 235' TOWER SOUTHWEST FACE

VIEW OF 235' TOWER SOUTHWEST FACE

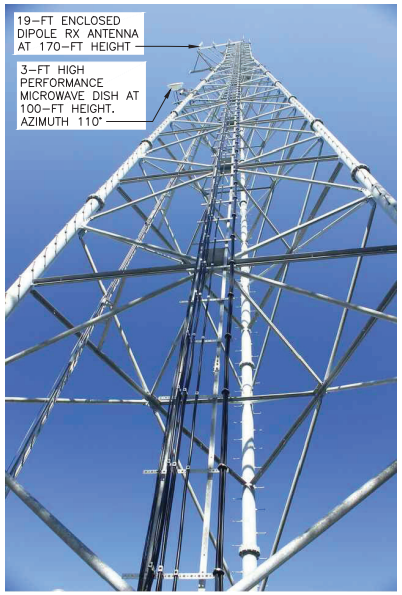

WAVEGUIDE LADDER ON TOWER EAST FACE

NORTH EXTERIOR WALL OF BUILDING SHOWING PROPOSED AREA FOR MOUNTING WEATHERPROOF SIREN ACTIVATION ENCLOSURE

TOWER GROUND BAR AT TRANSMISSION LINE VERTICAL–TO–HORIZONTAL TRANSITION ON TOWER EAST FACE

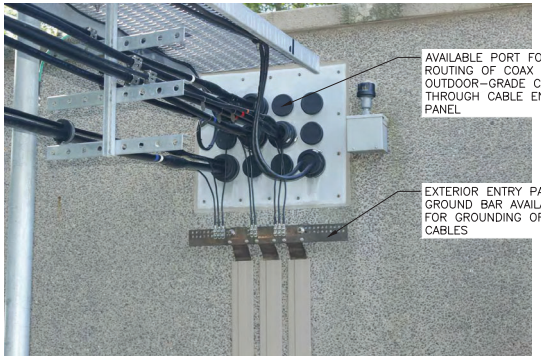

NORTH EXTERIOR WALL OF BUILDING SHOWING CABLE ENTRY PORT AND EXTERIOR GROUND BAR

VAULT SERIAL #	DATE	MARK	NATURE	MADE	CHK'D	REV'D
38,384			REVISIONS			

C:\pw_pci_working\jacobcomsulting-pw.bentley.com_osborncomsulting-pw-01\jacob romero\dms26270\V-128.dwg
jacobr May-31-22 11:48am

100% SUBMITTAL (NOT FOR CONSTRUCTION)

EXISTING CONDITIONS – SWAN 1

ADCOMM Engineering LLC

APPROVED FOR ADVERTISING
LIZ ALZEER
DEPARTMENT OF FINANCE & ADMINISTRATIVE SERVICES
SEATTLE, WASHINGTON . . . . . 20 . . .

BY: . . . . . .
CITY PURCHASING & CONTRACTING SERVICES DIRECTOR

INITIALS AND DATE		
DESIGNED	TK	6/01/22
CHECKED	JPB	6/01/22
DRAWN	TK	6/01/22
CHECKED	JPB	6/01/22

INITIALS AND DATE	
REVIEWED:	
DES.	CONST.
SDOT	PROJ. MGR.
RECEIVED	
REVISED AS BUILT	

ALL WORK SHALL BE DONE IN ACCORDANCE WITH THE CITY OF SEATTLE STANDARD PLANS AND SPECIFICATIONS AND OTHER DOCUMENTS CALLED FOR IN SECTION 0-02.3 OF THE PROJECT MANUAL.

JOSEPH P. BLASCHKA, STATE OF WASHINGTON, 17853, REGISTERED PROFESSIONAL ENGINEER

Seattle Public Utilities

ORDINANCE NO. PW NO. 2022-029

SCALE: NONE

TOLT DAM EARLY WARNING SYSTEM – OTHER PROJECT COMPONENTS

CIP	PC C115120
	CO
VPI #	785-45
	V-128
SHEET	33 OF 134

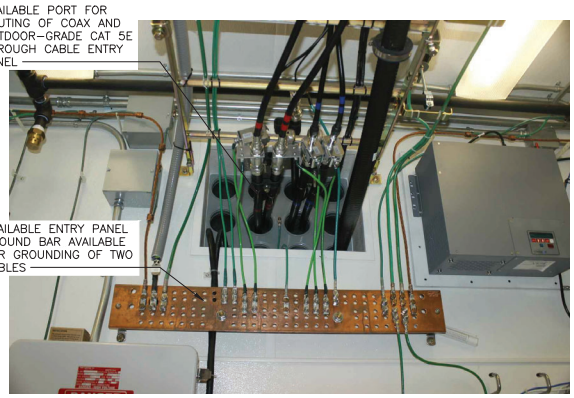

VIEW NORTH INSIDE BUILDING SHOWING CABLE ENTRY PANEL AND INTERIOR GROUND BAR

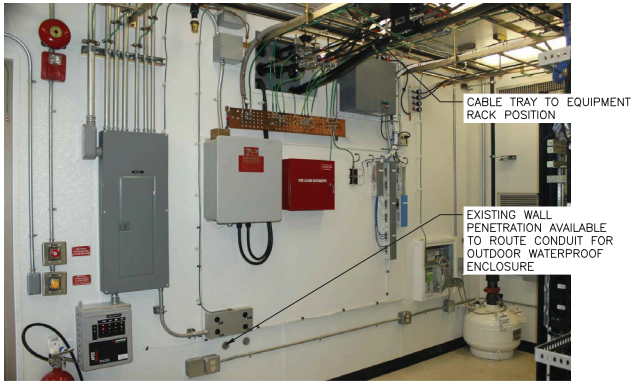

VIEW NORTH INSIDE BUILDING SHOWING CABLE ENTRY PANEL, INTERIOR GROUND BAR, AND CONDUIT EGRESS POINT

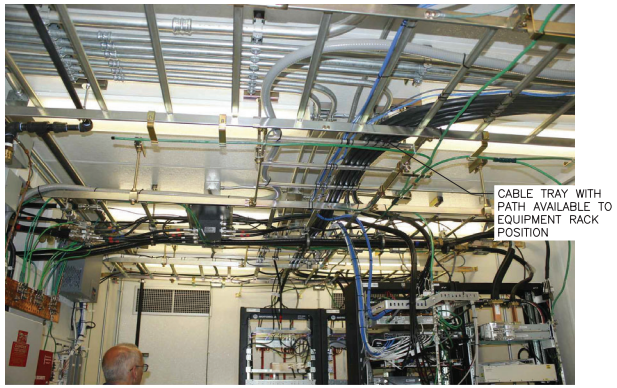

VIEW EAST INSIDE BUILDING SHOWING CABLE TRAY CONFIGURATION

VIEW SOUTHEAST INSIDE BUILDING SHOWING RACK LOCATIONS

VIEW SOUTHWEST INSIDE BUILDING SHOWING ROW 1, RACK 1

VAULT SERIAL #	DATE	MARK	NATURE	MADE	CHK'D	REV'D
38384			REVISIONS			

C:\pw_pci_working\jacobcomconsulting-pw.bentley.com_osborncomconsulting-pw-01\jacob.romero\dms26270\V-129.dwg
jacobr May-31-22 11:48am

100% SUBMITTAL (NOT FOR CONSTRUCTION)

EXISTING CONDITIONS – SWAN 2

ADCOMM Engineering LLC

APPROVED FOR ADVERTISING
LIZ ALZEER
DEPARTMENT OF FINANCE & ADMINISTRATIVE SERVICES
SEATTLE, WASHINGTON . . . . . 20 . . .

BY: . . . . . .
CITY PURCHASING & CONTRACTING SERVICES DIRECTOR

INITIALS AND DATE			INITIALS AND DATE	
DESIGNED	TK	6/01/22	REVIEWED: DES.	CONST.
CHECKED	JPB	6/01/22	SDOT	PROJ. MGR.
DRAWN	TK	6/01/22	RECEIVED	
CHECKED	JPB	6/01/22	REVISED AS BUILT	

ALL WORK SHALL BE DONE IN ACCORDANCE WITH THE CITY OF SEATTLE STANDARD PLANS AND SPECIFICATIONS AND OTHER DOCUMENTS CALLED FOR IN SECTION 0-02.3 OF THE PROJECT MANUAL.

STATE OF WASHINGTON JAMES P. BLASCHA 17853 REGISTERED PROFESSIONAL ENGINEER

Seattle Public Utilities

ORDINANCE NO. PW NO. 2022-029

SCALE: NONE

TOLT DAM EARLY WARNING SYSTEM – OTHER PROJECT COMPONENTS

JOB PC C115120 CO
VPI # 785-45
V-129
SHEET 34 OF 134

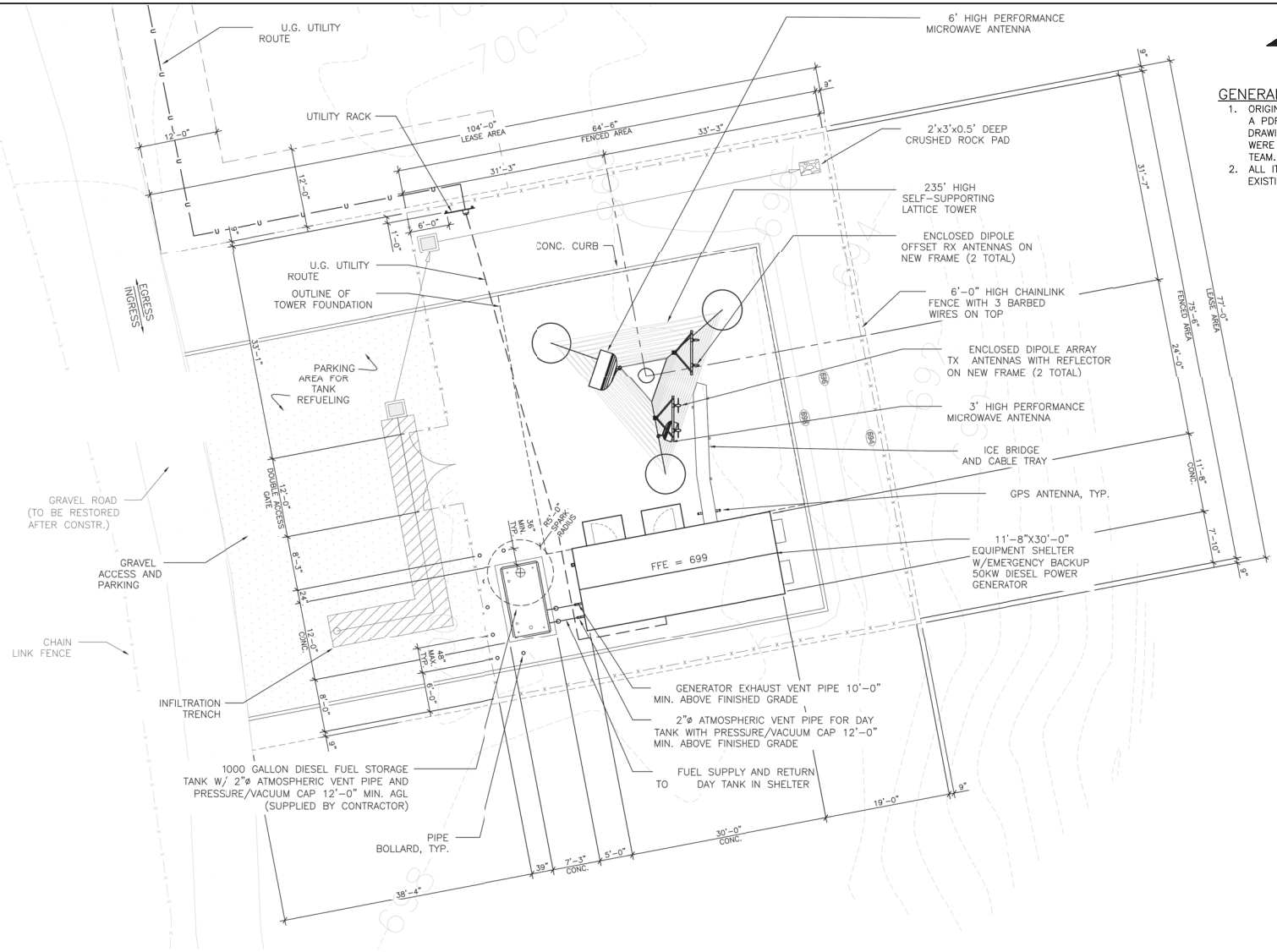

GENERAL NOTES

1. ORIGINAL BASE DRAWING IS BASED ON A PDF COPY OF THE ORIGINAL LINE DRAWINGS. THE ORIGINAL DRAWINGS WERE NOT AVAILABLE TO THE PROJECT TEAM.
2. ALL ITEMS ON THIS DRAWING ARE EXISTING.

VAULT SERIAL #	DATE	MARK	NATURE REVISIONS	MADE	CHK'D	REV'D
38,384						

PSERN SWAN – EXISTING SITE PLAN

NTS

100% SUBMITTAL (NOT FOR CONSTRUCTION)

EXISTING CONDITIONS – SWAN 3

ADCOMM Engineering LLC

APPROVED FOR ADVERTISING
LIZ ALZEER
DEPARTMENT OF FINANCE & ADMINISTRATIVE SERVICES
SEATTLE, WASHINGTON . . . . . 20 . . .
BY: . . . . . .
CITY PURCHASING & CONTRACTING SERVICES DIRECTOR

INITIALS AND DATE		
DESIGNED	TK	6/01/22
CHECKED	JPB	6/01/22
DRAWN	TK	6/01/22
CHECKED	JPB	6/01/22

INITIALS AND DATE	
REVIEWED:	
DES.	CONST.
SDOT	PROJ. MGR.
RECEIVED	
REVISED AS BUILT	

ALL WORK SHALL BE DONE IN ACCORDANCE WITH THE CITY OF SEATTLE STANDARD PLANS AND SPECIFICATIONS AND OTHER DOCUMENTS CALLED FOR IN SECTION 0-02.3 OF THE PROJECT MANUAL.

JOSEPH P. BLASCHKA, STATE OF WASHINGTON, 17853, REGISTERED PROFESSIONAL ENGINEER

Seattle Public Utilities

ORDINANCE NO. PW NO. 2022-029

SCALE: NTS

TOLT DAM EARLY WARNING SYSTEM – OTHER PROJECT COMPONENTS

CIP	PC C115120
	CO
VPI #	785-45
	V-130
SHEET	35 OF 134

C:\pw_oc1_working\jb\osborncomsulting-pw.bentley.com_osborncomsulting-pw-01\jacob romero\dms26270\V-130.dwg
jacobr May-31-22 11:48am

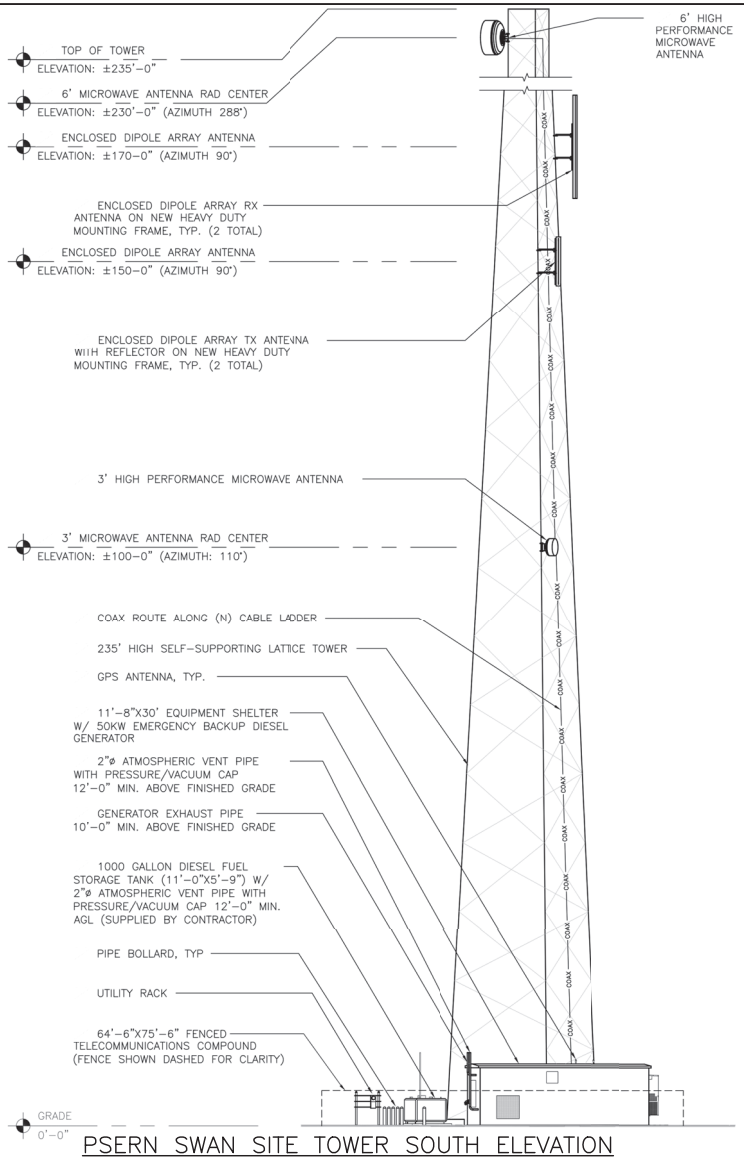

PSERN SWAN SITE TOWER SOUTH ELEVATION

NTS

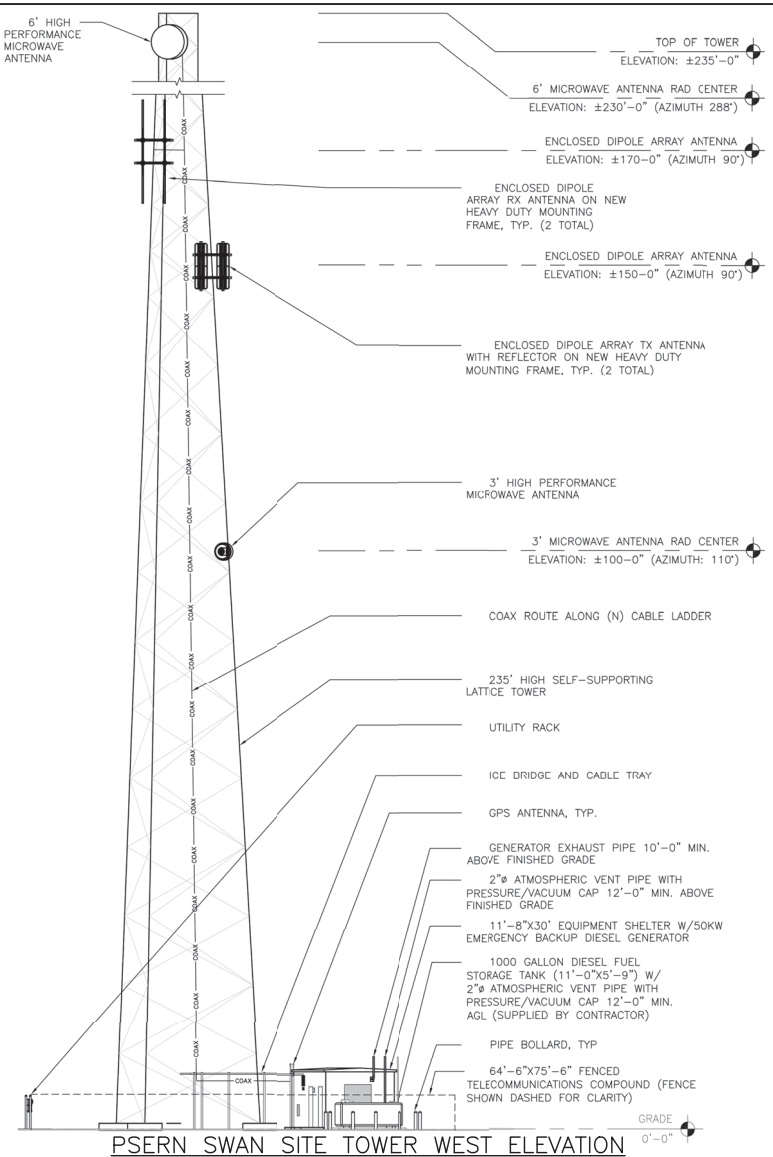

PSERN SWAN SITE TOWER WEST ELEVATION

NTS

GENERAL NOTES

1. ORIGINAL BASE DRAWING IS BASED ON A PDF COPY OF THE ORIGINAL LINE DRAWINGS. THE ORIGINAL DRAWINGS WERE NOT AVAILABLE TO THE PROJECT TEAM.
2. ALL ITEMS ON THIS DRAWING ARE EXISTING.

VAULT SERIAL #	DATE	MARK	NATURE REVISIONS	MADE	CHK'D	REV'D
38384						

100% SUBMITTAL (NOT FOR CONSTRUCTION)

EXISTING CONDITIONS – SWAN 4

ADCOMM Engineering LLC

APPROVED FOR ADVERTISING
LIZ ALZEER
DEPARTMENT OF FINANCE & ADMINISTRATIVE SERVICES
SEATTLE, WASHINGTON . . . . . 20 . . .
BY: . . . . . .
CITY PURCHASING & CONTRACTING SERVICES DIRECTOR

INITIALS AND DATE		
DESIGNED	TK	6/01/22
CHECKED	JPB	6/01/22
DRAWN	TK	6/01/22
CHECKED	JPB	6/01/22

INITIALS AND DATE	
REVIEWED:	
DES.	CONST.
SDOT	PROJ. MGR.
RECEIVED	
REVISED AS BUILT	

ALL WORK SHALL BE DONE IN ACCORDANCE WITH THE CITY OF SEATTLE STANDARD PLANS AND SPECIFICATIONS AND OTHER DOCUMENTS CALLED FOR IN SECTION 0-02.3 OF THE PROJECT MANUAL.

STATE OF WASHINGTON — JAMES P. BLASCHKA — 17853 — REGISTERED PROFESSIONAL ENGINEER

Seattle Public Utilities

ORDINANCE NO. PW NO. 2022-029

SCALE: NTS

TOLT DAM EARLY WARNING SYSTEM – OTHER PROJECT COMPONENTS

JOB PC CO	C115120
VPI #	785-45
	V-131
SHEET	36 OF 134

C:\pw_pol_working\jcb\osborneconsulting-pw.bentley.com_osborneconsulting-pw-01\jacob romero\dms26270\V-131.dwg
jacobr May-31-22 11:48am

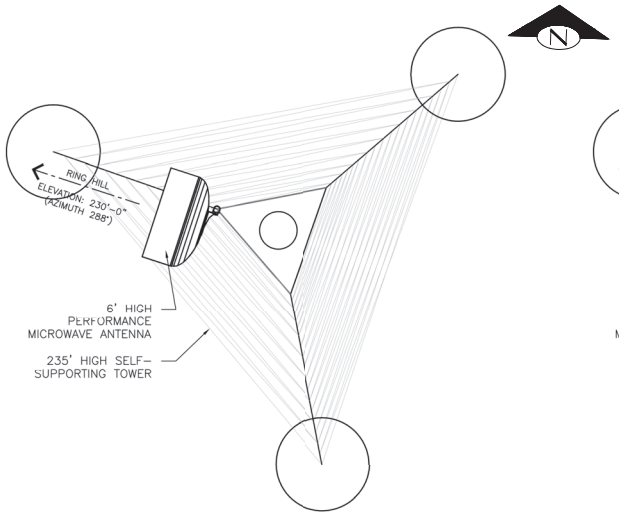

EXISTING ANTENNA PLAN @ 230'-0"

NTS

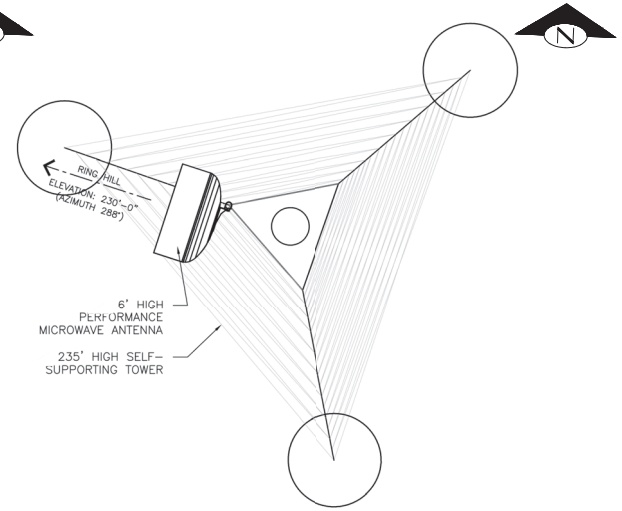

EXISTING ANTENNA PLAN @ 150'-0"

NTS

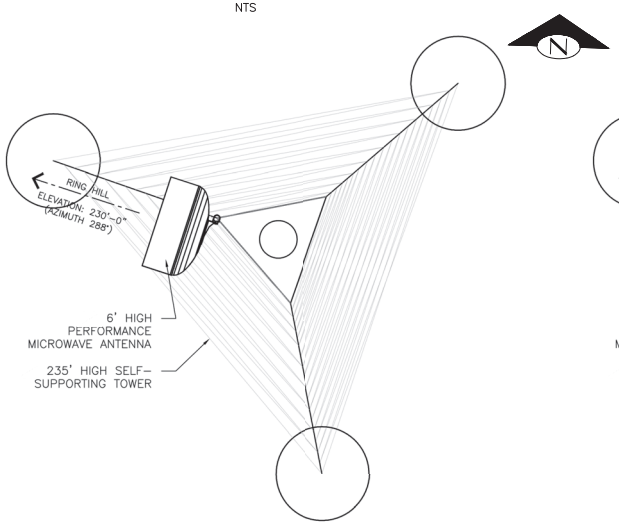

EXISTING ANTENNA PLAN @ 170'-0"

NTS

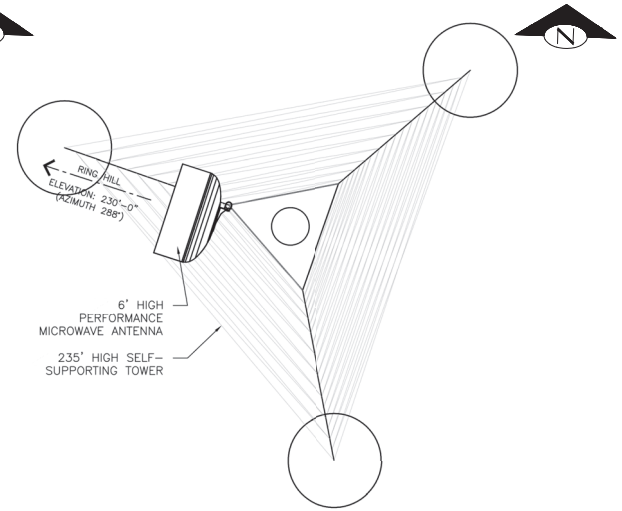

EXISTING ANTENNA PLAN @ 100'-0"

NTS

GENERAL NOTES

1. ORIGINAL BASE DRAWING IS BASED ON A PDF COPY OF THE ORIGINAL LINE DRAWINGS. THE ORIGINAL DRAWINGS WERE NOT AVAILABLE TO THE PROJECT TEAM.
2. ALL ITEMS ON THIS DRAWING ARE EXISTING.

VAULT SERIAL #	DATE	MARK	NATURE OF REVISIONS	MADE	CHK'D	REV'D
38,384						

100% SUBMITTAL (NOT FOR CONSTRUCTION)

EXISTING CONDITIONS – SWAN 5

ADCOMM Engineering LLC

APPROVED FOR ADVERTISING
LIZ ALZEER
DEPARTMENT OF FINANCE & ADMINISTRATIVE SERVICES
SEATTLE, WASHINGTON . . . . . 20 . . .

BY: . . . . . .
CITY PURCHASING & CONTRACTING SERVICES DIRECTOR

INITIALS AND DATE		
DESIGNED	TK	6/01/22
CHECKED	JPB	6/01/22
DRAWN	TK	6/01/22
CHECKED	JPB	6/01/22

INITIALS AND DATE	
REVIEWED:	
DES.	CONST.
SDOT	PROJ. MGR.
RECEIVED	
REVISED AS BUILT	

ALL WORK SHALL BE DONE IN ACCORDANCE WITH THE CITY OF SEATTLE STANDARD PLANS AND SPECIFICATIONS AND OTHER DOCUMENTS CALLED FOR IN SECTION 0-02.3 OF THE PROJECT MANUAL.

JOSEPH P. BLASCHA
STATE OF WASHINGTON
17853
REGISTERED PROFESSIONAL ENGINEER

Seattle Public Utilities

ORDINANCE NO. PW NO. 2022-029

SCALE: NTS

TOLT DAM EARLY WARNING SYSTEM – OTHER PROJECT COMPONENTS

CDB	PC CO	C115120
	VPI #	785-45
		V-132
	SHEET	37 OF 134

C:\pw_pol_working\osborneconsulting-pw.bentley.com_osborneconsulting-pw-01\jacob romero\dms26270\V-132.dwg
jacobr May-31-22 11:48am

GENERAL NOTES

1. ORIGINAL BASE DRAWING IS BASED ON A PDF COPY OF THE ORIGINAL LINE DRAWINGS. THE ORIGINAL DRAWINGS WERE NOT AVAILABLE TO THE PROJECT TEAM.
2. ALL ITEMS ON THIS DRAWING ARE EXISTING.

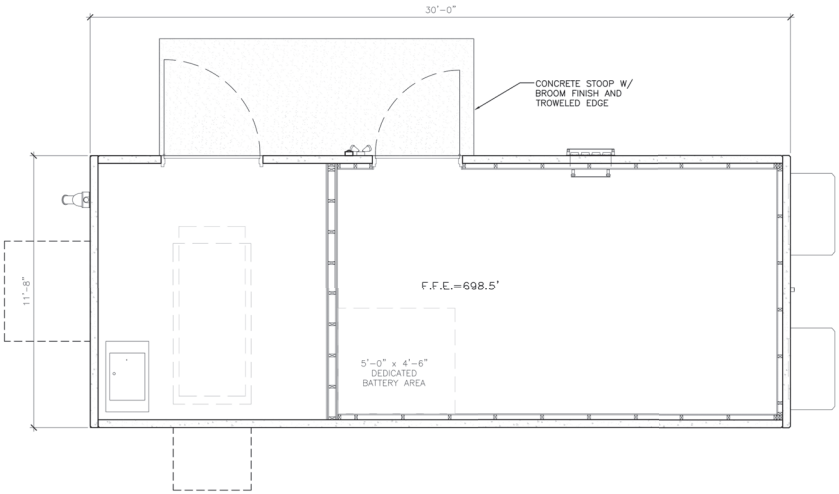

EXISTING SHELTER – PLAN VIEW

NTS

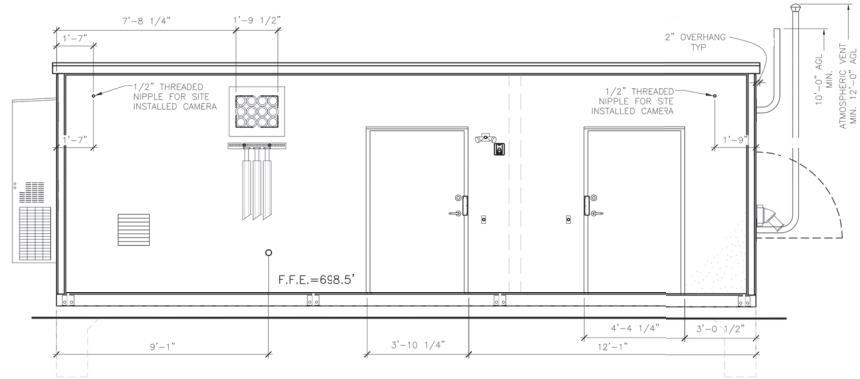

EXISTING SHELTER – FRONT ELEVATION

NTS

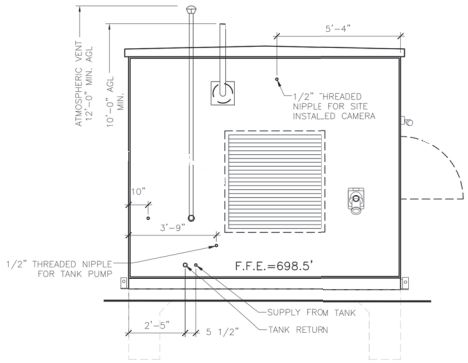

EXISTING SHELTER – LEFT ELEVATION

NTS

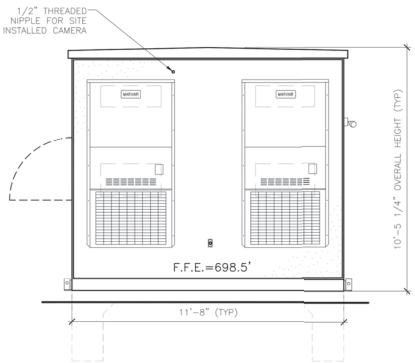

EXISTING SHELTER – RIGHT ELEVATION

NTS

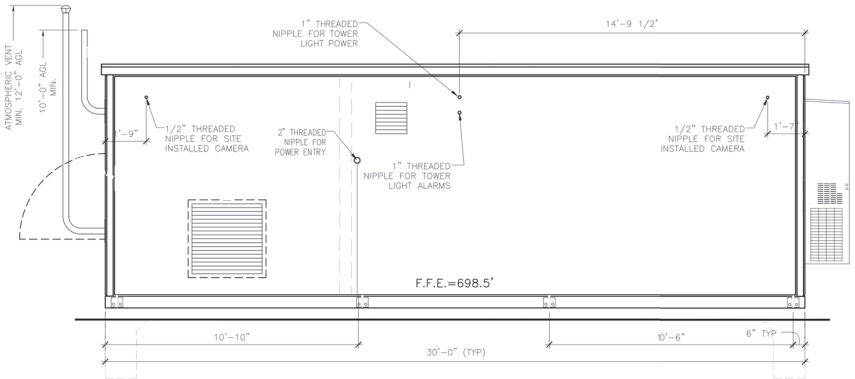

EXISTING SHELTER – REAR ELEVATION

NTS

VAULT SERIAL #	DATE	MARK	NATURE	MADE	CHK'D	REV'D
38,384			REVISIONS			

100% SUBMITTAL (NOT FOR CONSTRUCTION)

EXISTING CONDITIONS – SWAN 6

ADCOMM Engineering LLC

APPROVED FOR ADVERTISING
LIZ ALZEER
DEPARTMENT OF FINANCE & ADMINISTRATIVE SERVICES
SEATTLE, WASHINGTON . . . . . 20 . . .
BY: . . . . . .
CITY PURCHASING & CONTRACTING SERVICES DIRECTOR

INITIALS AND DATE		
DESIGNED	TK	6/01/22
CHECKED	JPB	6/01/22
DRAWN	TK	6/01/22
CHECKED	JPB	6/01/22

INITIALS AND DATE	
REVIEWED:	
DES.	CONST.
SDOT	PROJ. MGR.
RECEIVED	
REVISED AS BUILT	

ALL WORK SHALL BE DONE IN ACCORDANCE WITH THE CITY OF SEATTLE STANDARD PLANS AND SPECIFICATIONS AND OTHER DOCUMENTS CALLED FOR IN SECTION 0-02.3 OF THE PROJECT MANUAL.

STATE OF WASHINGTON JOSEPH P. BLASCHA 17853 REGISTERED PROFESSIONAL ENGINEER

Seattle Public Utilities

ORDINANCE NO. PW NO. 2022-029

SCALE: NTS

TOLT DAM EARLY WARNING SYSTEM – OTHER PROJECT COMPONENTS

CIP PC CO	C115120
VPI #	785-45
	V-133
SHEET	38 OF 134

C:\pw_pcl_workingdir\osborneconsulting-pw-bentley.com_osborneconsulting-pw-01\jacob romero\dms26270\V-133.dwg
jacobr May-31-22 11:48am

GENERAL NOTES

1. ORIGINAL BASE DRAWING IS BASED ON A PDF COPY OF THE ORIGINAL LINE DRAWINGS. THE ORIGINAL DRAWINGS WERE NOT AVAILABLE TO THE PROJECT TEAM.
2. ALL ITEMS ON THIS DRAWING ARE EXISTING.

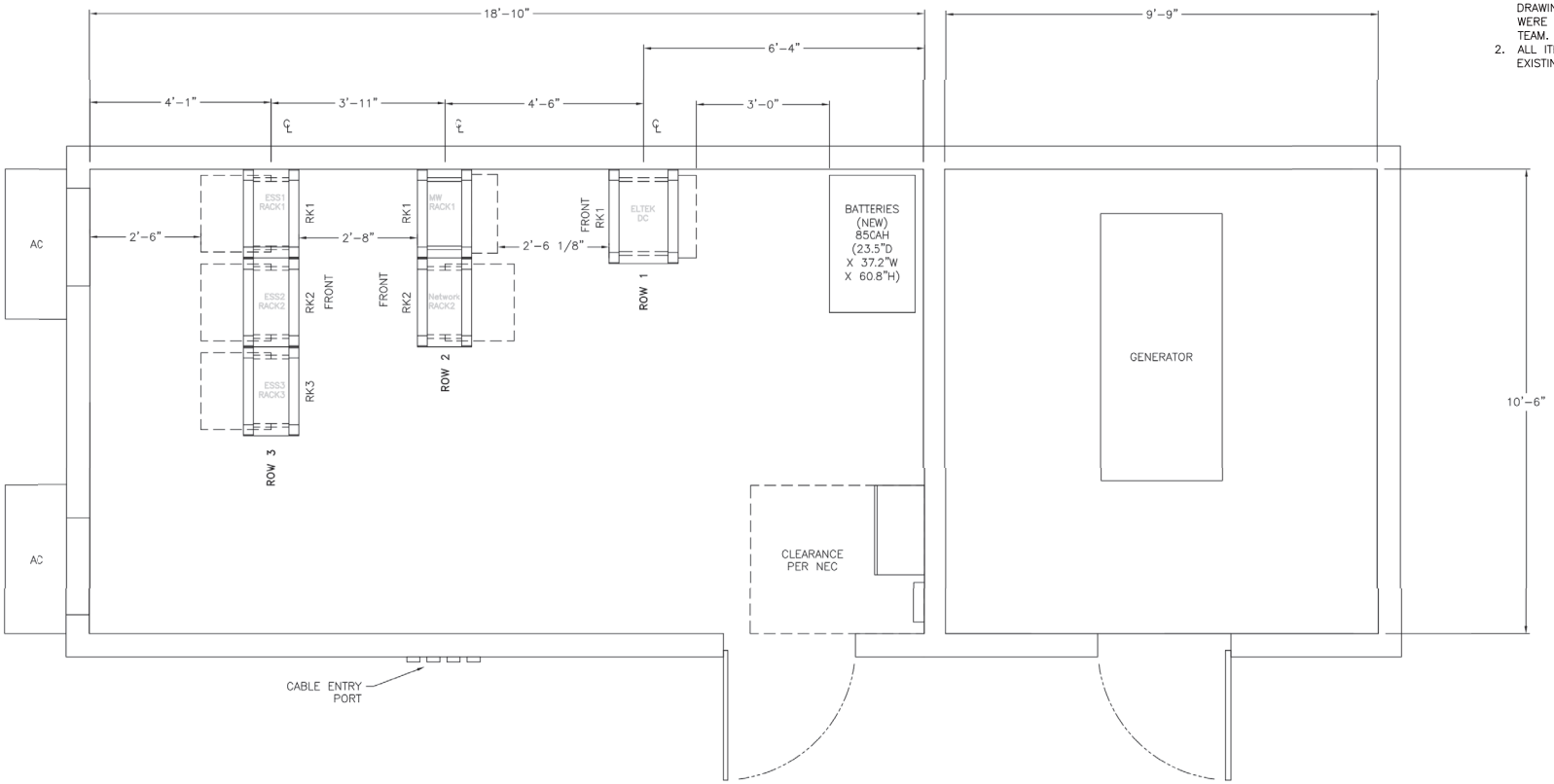

EXISTING SHELTER ROOM EQUIPMENT LAYOUT – PLAN VIEW

NTS

RACK INFORMATION:
ROW 1
RK1 – DC POWER EQUIPMENT
ROW 2
RK1 – MICROWAVE EQUIPMENT
RK2 – NETWORK EQUIPMENT
ROW 3
RK1 – GTR8000 ESS RACK NO. 1
RK2 – GTR8000 ESS RACK NO. 2
RK3 – GTR8000 ESS RACK NO. 3

VAULT SERIAL #	DATE	MARK	NATURE	MADE	CHK'D	REV'D
35,364			REVISIONS			

C:\pw_ocs_working\jb\osborneconsulting-pw.bentley.com_osborneconsulting-pw-01\jacob romero\dms26270\V-134.dwg
jacobr May-31-22 11:48am

100% SUBMITTAL (NOT FOR CONSTRUCTION)

EXISTING CONDITIONS – SWAN 7

ADCOMM Engineering LLC

APPROVED FOR ADVERTISING
LIZ ALZEER
DEPARTMENT OF FINANCE & ADMINISTRATIVE SERVICES
SEATTLE, WASHINGTON . . . . . 20 . . .
BY: . . . . . .
CITY PURCHASING & CONTRACTING SERVICES DIRECTOR

INITIALS AND DATE		
DESIGNED	TK	6/01/22
CHECKED	JPB	6/01/22
DRAWN	JPB	6/01/22
CHECKED	TK	6/01/22

INITIALS AND DATE	
REVIEWED:	
DES.	CONST.
SDOT	PROJ. MGR.
RECEIVED	
REVISED AS BUILT	

ALL WORK SHALL BE DONE IN ACCORDANCE WITH THE CITY OF SEATTLE STANDARD PLANS AND SPECIFICATIONS AND OTHER DOCUMENTS CALLED FOR IN SECTION 0-02.3 OF THE PROJECT MANUAL.

STATE OF WASHINGTON JOSEPH P. BLASCHKA 17853 REGISTERED PROFESSIONAL ENGINEER

Seattle Public Utilities

ORDINANCE NO. PW NO. 2022-029

SCALE: NTS

TOLT DAM EARLY WARNING SYSTEM – OTHER PROJECT COMPONENTS

JOB PC CO	C115120
VPI #	785-45
	V-134
SHEET	39 OF 134

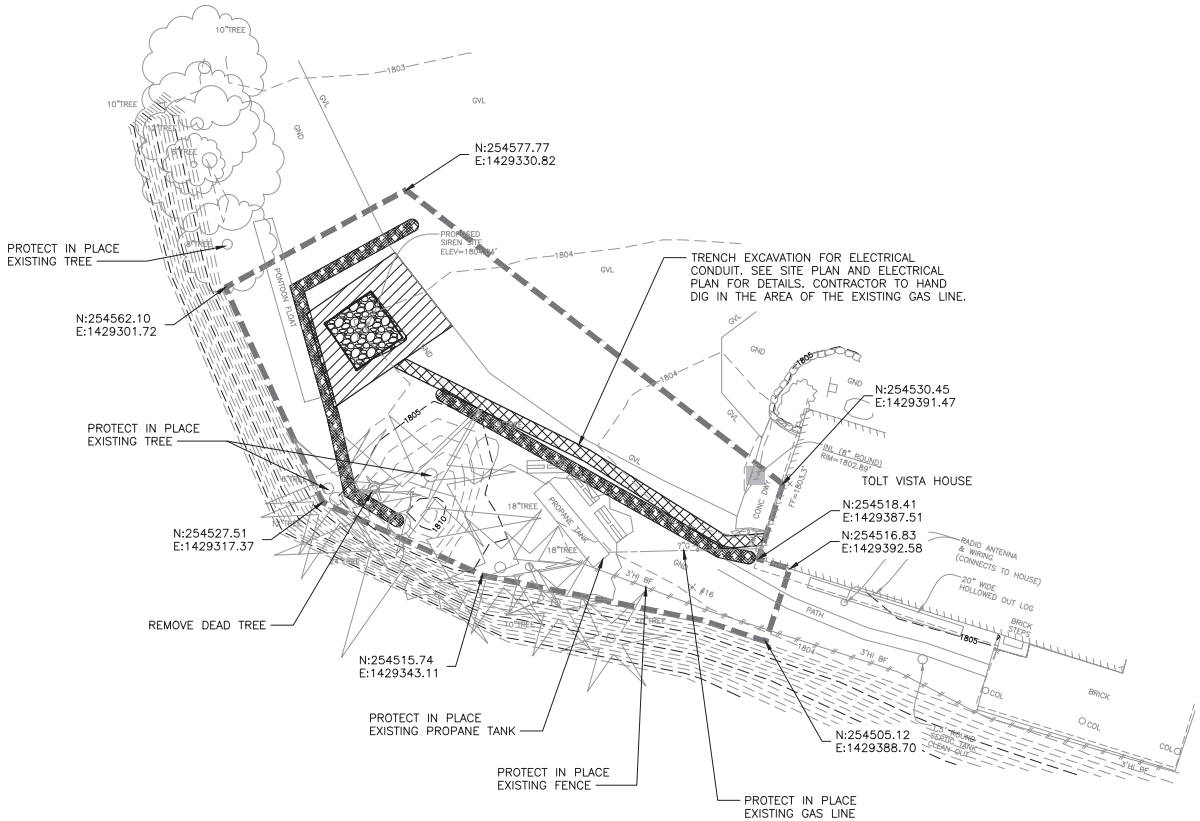

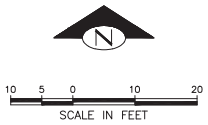

GENERAL NOTES

1. THE CONTRACTOR MUST TRIM ALL TREE BRANCHES WITHIN A 10-FOOT HORIZONTAL RADIUS OF SIREN POLES.
2. THE CONTRACTOR MUST RESTORE DISTURBED AREAS PER THE SITE PLAN. DISTURBED AREAS OUTSIDE OF THE CLEARING AND GRUBBING AND TRENCH EXCAVATION LIMITS MUST BE RESTORED TO EXISTING CONDITION AT THE CONTRACTOR'S EXPENSE.
3. PROTECT IN PLACE ALL OVERHEAD POWER LINES AND CABLES.

SITE PREPARATION LEGEND:

- CLEARING AND GRUBBING PER SPECIAL PROVISION 31 11 00
- TRENCH EXCAVATION SEE ELECTRICAL PLANS FOR DETAILS
- COMPOST SOCK PER KCSWDM APPENDIX D, SECTION D.2.1.3.6
- CONSTRUCTION BOUNDARY
- SILT FENCE
- HIGH VISIBILITY FENCE
- PROTECT INLET PER SPECIAL PROVISION 01 57 13

VAULT SERIAL #	DATE	MARK	NATURE	MADE BY	CHK'D	REV'D
38384			REVISIONS			

100% SUBMITTAL (NOT FOR CONSTRUCTION)

SITE PREPARATION – OWS 5

ADCOMM Engineering LLC

OSBORN CONSULTING INCORPORATED

APPROVED FOR ADVERTISING
LIZ ALZEER
DEPARTMENT OF FINANCE & ADMINISTRATIVE SERVICES
SEATTLE, WASHINGTON . . . . . 20 . . .

BY: . . . . . .
CITY PURCHASING & CONTRACTING SERVICES DIRECTOR

INITIALS AND DATE		
DESIGNED	JSG	6/01/22
CHECKED	DLJ	6/01/22
DRAWN	JAR	6/01/22
CHECKED	JSG	6/01/22

INITIALS AND DATE	
REVIEWED:	
DES.	CONST.
SDOT	PROJ. MGR.
RECEIVED	
REVISED AS BUILT	

ALL WORK SHALL BE DONE IN ACCORDANCE WITH THE CITY OF SEATTLE STANDARD PLANS AND SPECIFICATIONS AND OTHER DOCUMENTS CALLED FOR IN SECTION 0-02.3 OF THE PROJECT MANUAL.

DANIEL GLOVER
STATE OF WASHINGTON
REGISTERED PROFESSIONAL ENGINEER

Seattle Public Utilities

ORDINANCE NO. PW NO. 2022-029

SCALE: 1"=10'

TOLT DAM EARLY WARNING SYSTEM – OTHER PROJECT COMPONENTS

CIP PC	C115120
CIP CO	
VPI #	785-45
	C-101
SHEET	40 OF 134

C:\pw_pcl_working\jsg\osbornconsulting-pw-bentley.com_osbornconsulting-pw-01\jacob romero\dms26270\C-101.dwg
jacobr May-31-22 11:48am

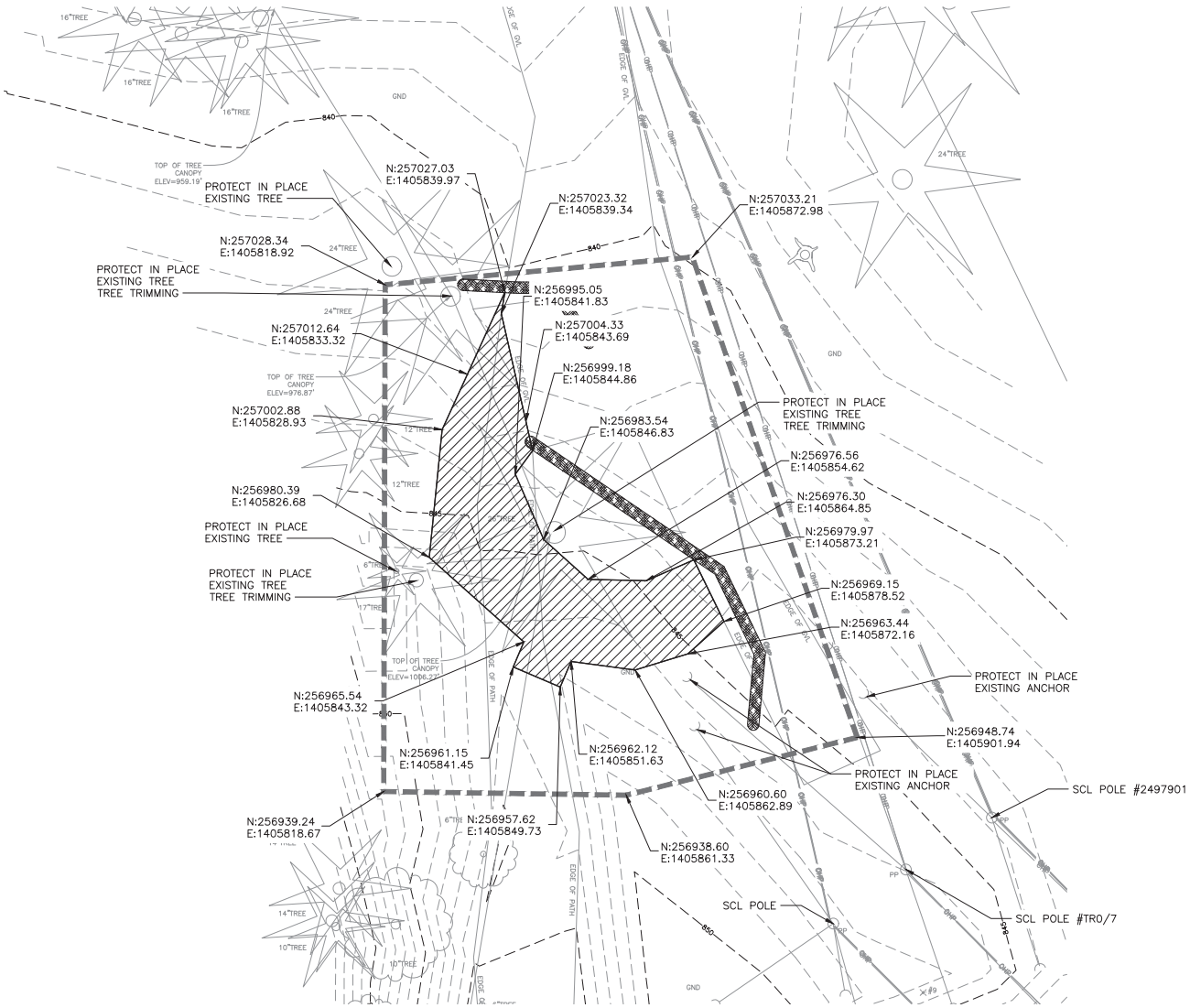

N

10 5 0 10 20
SCALE IN FEET

GENERAL NOTES

1. THE CONTRACTOR MUST TRIM ALL TREE BRANCHES WITHIN A 10-FOOT HORIZONTAL RADIUS OF SIREN POLES.
2. THE CONTRACTOR MUST RESTORE DISTURBED AREAS PER THE SITE PLAN. DISTURBED AREAS OUTSIDE OF THE CLEARING AND GRUBBING AND TRENCH EXCAVATION LIMITS MUST BE RESTORED TO EXISTING CONDITION AT THE CONTRACTOR'S EXPENSE.
3. TRIM EXISTING TREES TO A HEIGHT OF 15 FT AT THE EDGES OF THE GRAVEL ACCESS ROAD AREA SHOWN ON THE SITE PLAN.

SITE PREPARATION LEGEND:

- CLEARING AND GRUBBING PER SPECIAL PROVISION 31 11 00
- TRENCH EXCAVATION SEE ELECTRICAL PLANS FOR DETAILS
- COMPOST SOCK PER KCSWDM APPENDIX D, SECTION D.2.1.3.6
- CONSTRUCTION BOUNDARY
- SILT FENCE
- HIGH VISIBILITY FENCE
- PROTECT INLET PER SPECIAL PROVISION 01 57 13

VAULT SERIAL #	DATE	MARK	NATURE REVISIONS	MADE BY	CHK'D	REV'D
58384						

100% SUBMITTAL (NOT FOR CONSTRUCTION)

SITE PREPARATION – OWS 6

ADCOMM Engineering LLC

OSBORN CONSULTING INCORPORATED

APPROVED FOR ADVERTISING
LIZ ALZEER
DEPARTMENT OF FINANCE & ADMINISTRATIVE SERVICES
SEATTLE, WASHINGTON . . . . . 20 . . .
BY: . . . . . .
CITY PURCHASING & CONTRACTING SERVICES DIRECTOR

INITIALS AND DATE			INITIALS AND DATE
DESIGNED JSG	6/01/22		REVIEWED: DES. CONST. SDOT PROJ. MGR.
CHECKED DLJ	6/01/22		
DRAWN JAR	6/01/22		RECEIVED
CHECKED JSG	6/01/22		REVISED AS BUILT

ALL WORK SHALL BE DONE IN ACCORDANCE WITH THE CITY OF SEATTLE STANDARD PLANS AND SPECIFICATIONS AND OTHER DOCUMENTS CALLED FOR IN SECTION 0-02.3 OF THE PROJECT MANUAL.

DANIEL GLOVER STATE OF WASHINGTON REGISTERED PROFESSIONAL ENGINEER

Seattle Public Utilities

ORDINANCE NO. PW NO. 2022-029

SCALE: 1"=10'

TOLT DAM EARLY WARNING SYSTEM – OTHER PROJECT COMPONENTS

CIP	PC CO	C115120
	VPI #	785-45
		C-102
	SHEET	41 OF 134

C:\pw_pcl_working\jsg\osbornconsulting-pw-bentley.com_osbornconsulting-pw-01\jacob romero\dms26270\C-102.dwg
jacobr May-31-22 11:49am

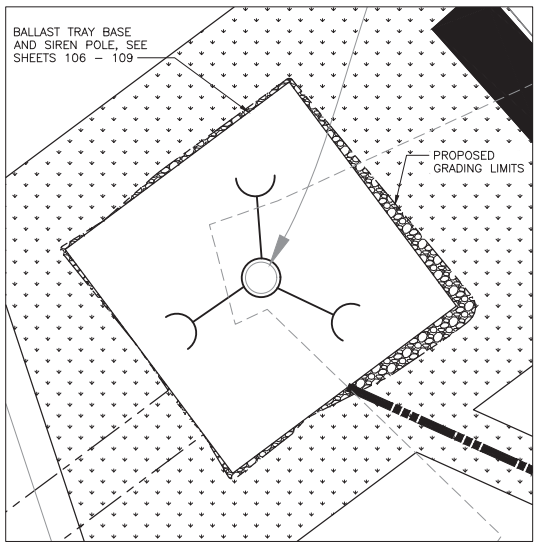

VIEW A

NTS

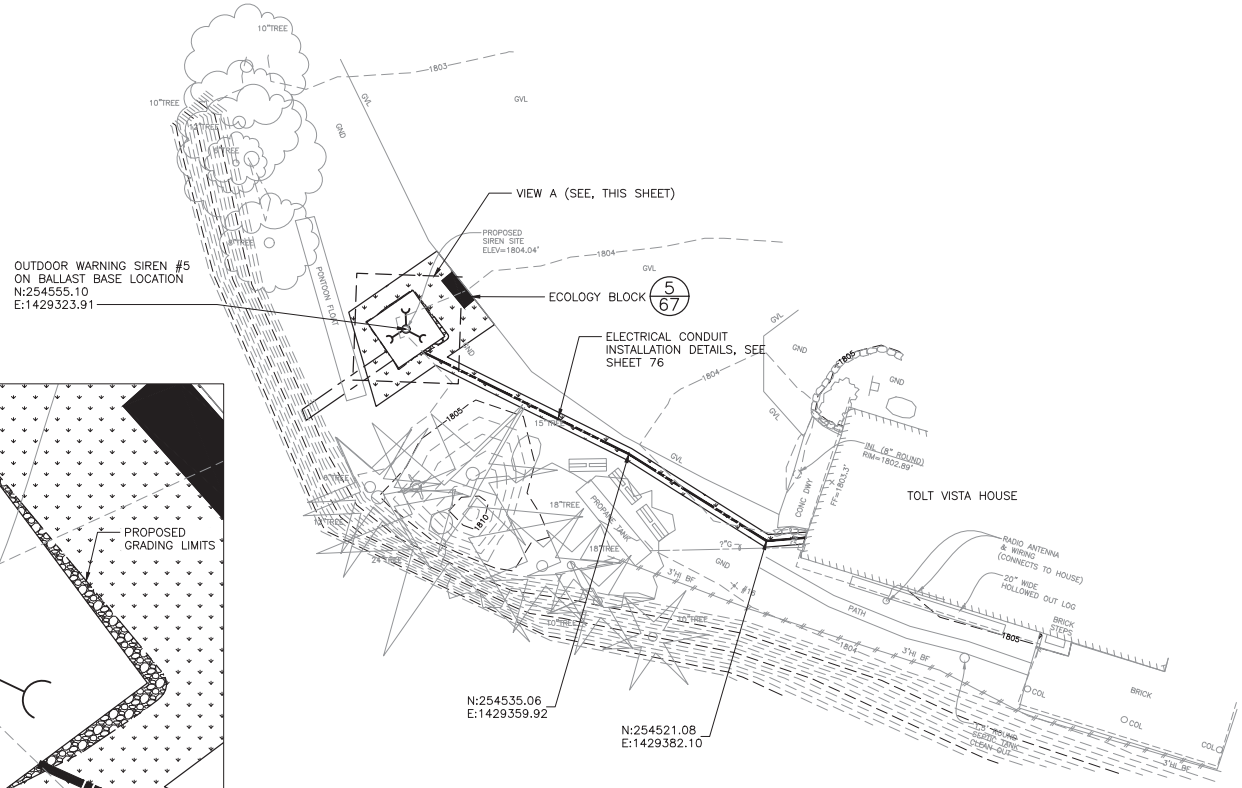

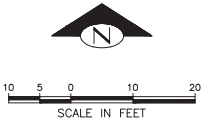

GENERAL NOTES

1. FOR ELECTRICAL DETAILS, SEE FINAL ELECTRICAL PLANS.
2. FOR CONSTRUCTION LIMITS, SEE SITE PREPARATION SHEETS.
3. FOR SIREN POLE DETAILS, SEE SHEETS 98 AND 110.

SITE PLAN LEGEND:

- SEEDED LAWN INSTALLATION PER SPECIAL PROVISION 32 92 19
- SIDEWALK CONCRETE PER SPECIAL PROVISION 32 16 23
- MINERAL AGGREGATE TYPE PER DETAIL AND SPECIAL PROVISION 00 31 10B
- ARBORIST WOOD CHIP MULCH 2" DEPTH PER SPECIAL PROVISION 01 57 13
- OHP — NEW OHP CONNECTION (BY PUGET SOUND ENERGY)
- UNDERGROUND POWER LINE
- SIREN POLE
- REMOVABLE BOLLARD PER SPECIAL PROVISION 32 39 13
- ECOLOGY BLOCK
- POLE–MOUNTED EQUIPMENT CABINET
- HIGHWAY MESSAGE SIGN
- SIREN POLE ON BALLAST BASE

VAULT SERIAL #	DATE	MARK	NATURE REVISIONS	MADE	CHK'D	REV'D
38,384						

100% SUBMITTAL (NOT FOR CONSTRUCTION)

SITE PLAN – OWS 5

ADCOMM Engineering LLC

OSBORN CONSULTING INCORPORATED

APPROVED FOR ADVERTISING
LIZ ALZEER
DEPARTMENT OF FINANCE & ADMINISTRATIVE SERVICES
SEATTLE, WASHINGTON . . . . . 20 . . .
BY: . . . . . .
CITY PURCHASING & CONTRACTING SERVICES DIRECTOR

INITIALS AND DATE			INITIALS AND DATE
DESIGNED	JSG	6/01/22	REVIEWED: DES. CONST. SDOT PROJ. MGR.
CHECKED	DLJ	6/01/22	
DRAWN	JAR	6/01/22	RECEIVED
CHECKED	JSG	6/01/22	REVISED AS BUILT

ALL WORK SHALL BE DONE IN ACCORDANCE WITH THE CITY OF SEATTLE STANDARD PLANS AND SPECIFICATIONS AND OTHER DOCUMENTS CALLED FOR IN SECTION 0-02.3 OF THE PROJECT MANUAL.

DANIEL GLOVER STATE OF WASHINGTON REGISTERED PROFESSIONAL ENGINEER

Seattle Public Utilities

ORDINANCE NO. PW NO. 2022-029

SCALE: AS NOTED

TOLT DAM EARLY WARNING SYSTEM – OTHER PROJECT COMPONENTS

CBB PC C115120 CO

VPI # 785-45

C-114

SHEET 53 OF 134

C:\pw_pcl_working\jsb\osbornconsulting-pw-01\jacob romero\dms26270\C-114.dwg
jacobr May-31-22 11:51am

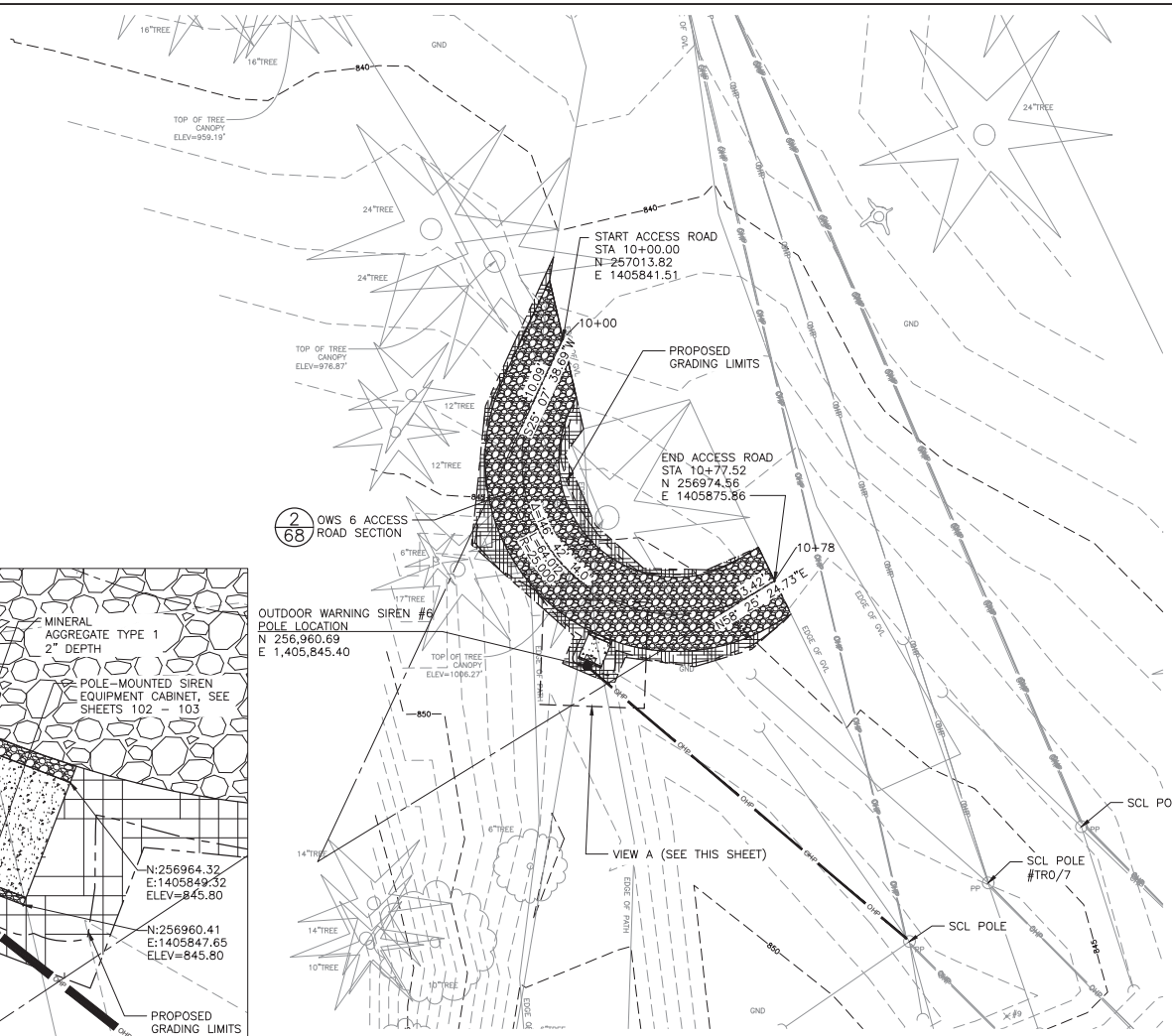

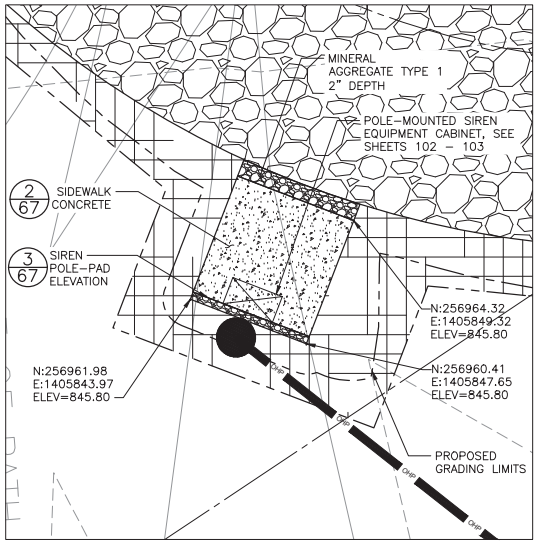

VIEW A

NTS

N

10 5 0 10 20

SCALE IN FEET

GENERAL NOTES

1. FOR ELECTRICAL DETAILS, SEE FINAL ELECTRICAL PLANS.
2. FOR CONSTRUCTION LIMITS, SEE SITE PREPARATION SHEETS.
3. FOR SIREN POLE DETAILS, SEE SHEETS 98 AND 110.

SITE PLAN LEGEND:

- SEEDED LAWN INSTALLATION PER SPECIAL PROVISION 32 92 19
- SIDEWALK CONCRETE PER SPECIAL PROVISION 32 16 23
- MINERAL AGGREGATE TYPE PER DETAIL AND SPECIAL PROVISION 00 31 10B
- ARBORIST WOOD CHIP MULCH 2" DEPTH PER SPECIAL PROVISION 01 57 13
- OHP — NEW OHP CONNECTION (BY PUGET SOUND ENERGY)
- UNDERGROUND POWER LINE
- SIREN POLE
- REMOVABLE BOLLARD PER SPECIAL PROVISION 32 39 13
- ECOLOGY BLOCK
- POLE-MOUNTED EQUIPMENT CABINET
- HIGHWAY MESSAGE SIGN
- SIREN POLE ON BALLAST BASE

VAULT SERIAL #	DATE	MARK	NATURE	MADE	CHK'D	REV'D
383384			REVISIONS			

100% SUBMITTAL (NOT FOR CONSTRUCTION)

SITE PLAN – OWS 6

ADCOMM Engineering LLC

OSBORN CONSULTING INCORPORATED

APPROVED FOR ADVERTISING
LIZ ALZEER
DEPARTMENT OF FINANCE & ADMINISTRATIVE SERVICES
SEATTLE, WASHINGTON . . . . . 20 . . .
BY: . . . . . .
CITY PURCHASING & CONTRACTING SERVICES DIRECTOR

INITIALS AND DATE		
DESIGNED JSG	6/01/22	
CHECKED DLJ	6/01/22	
DRAWN JAR	6/01/22	
CHECKED JSG	6/01/22	

INITIALS AND DATE	
REVIEWED:	
DES.	CONST.
SDOT	PROJ. MGR.
RECEIVED	
REVISED AS BUILT	

ALL WORK SHALL BE DONE IN ACCORDANCE WITH THE CITY OF SEATTLE STANDARD PLANS AND SPECIFICATIONS AND OTHER DOCUMENTS CALLED FOR IN SECTION 0-02.3 OF THE PROJECT MANUAL.

DANIEL GLOVER STATE OF WASHINGTON REGISTERED PROFESSIONAL ENGINEER

Seattle Public Utilities

ORDINANCE NO. PW NO. 2022-029

SCALE: AS NOTED

TOLT DAM EARLY WARNING SYSTEM – OTHER PROJECT COMPONENTS

CDB PC CO	C115120
VPI #	785-45
	C-115
SHEET	54 OF 134

C:\pw_pol_working\osborncomsulting-pw-01\jscob romero\dms26270\C-115.dwg
jscobr May-31-22 11:51am

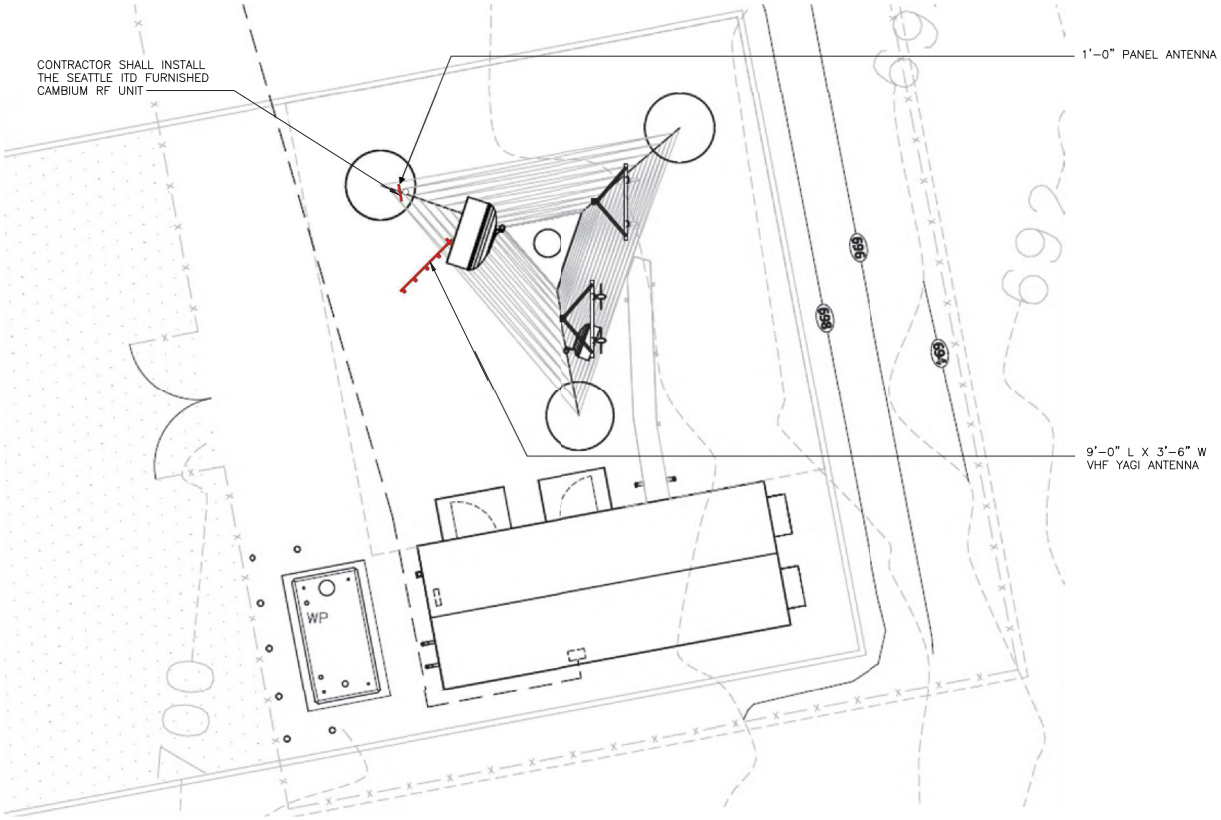

10 5 0 10 20
SCALE IN FEET

GENERAL NOTES:

1. THIS DRAWING INFORMATION IS BASED ON THE PSERN SITE DRAWING SET DATED JULY 31, 2017.

VAULT SERIAL #	DATE	MARK	NATURE	MADE	CHK'D	REV'D
38,384			REVISIONS			

C:\pw_pcl_workingdir\osbornconsulting-pw.bentley.com_osbornconsulting-pw-01\jacob romero\dms26270\C-127.dwg
jacobr May-31-22 11:53am

100% SUBMITTAL (NOT FOR CONSTRUCTION)

SITE PLAN – SWAN

ADCOMM Engineering LLC

APPROVED FOR ADVERTISING
LIZ ALZEER
DEPARTMENT OF FINANCE & ADMINISTRATIVE SERVICES
SEATTLE, WASHINGTON . . . . . 20 . . .
BY: . . . . . .
CITY PURCHASING & CONTRACTING SERVICES DIRECTOR

INITIALS AND DATE		
DESIGNED	TK	6/01/22
CHECKED	JPB	6/01/22
DRAWN	TK	6/01/22
CHECKED	JPB	6/01/22

INITIALS AND DATE	
REVIEWED:	
DES.	CONST.
SDOT	PROJ. MGR.
RECEIVED	
REVISED AS BUILT	

ALL WORK SHALL BE DONE IN ACCORDANCE WITH THE CITY OF SEATTLE STANDARD PLANS AND SPECIFICATIONS AND OTHER DOCUMENTS CALLED FOR IN SECTION 0-02.3 OF THE PROJECT MANUAL.

JOSEPH P. BLASCHKA
STATE OF WASHINGTON
17853
REGISTERED PROFESSIONAL ENGINEER

Seattle Public Utilities

ORDINANCE NO. PW NO. 2022-029

SCALE: AS NOTED

TOLT DAM EARLY WARNING SYSTEM – OTHER PROJECT COMPONENTS

CDB PC CO	C115120
VPI #	785-45
	C-127
SHEET	66 OF 134

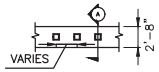

REMOVABLE BOLLARD PLAN

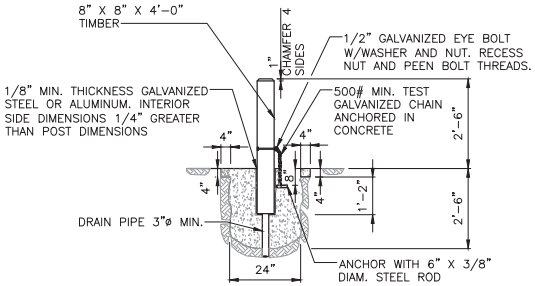

REMOVABLE BOLLARD SECTION A

NOTES:

1. TIMBER SHALL BE DOUGLAS FIR, DENSE CONSTRUCTION GRADE, AND SHALL BE PRESSURE TREATED WITH A WATERBORNE PRESERVATIVE (ACA, CCA, ACZA) IN ACCORDANCE WITH THE REQUIREMENTS OF SEC. 9-09.3 (1) OF THE WSDOT/APWA STANDARD SPECIFICATIONS. TOP 5 IN. OF TIMBER SHALL BE PAINTED WHITE.
2. STEEL TUBE SHALL CONFORM TO ASTM A53 GRADE A.
3. NUTS, BOLTS, & WASHERS SHALL CONFORM TO ASTM A307.
4. ALL STEEL PARTS SHALL BE GALVANIZED.
5. CONCRETE SHALL BE CLASS 4000.

REMOVABLE BOLLARD (1 / 55, 63)
NTS

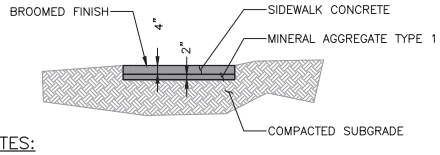

NOTES:

1. FOR SIDEWALK CONCRETE, SEE SPECIFICATIONS SECTION 32 16 23.
2. FOR MINERAL AGGREGATE TYPE 1 GRADATION AND PLACEMENT, SEE SPECIFICATIONS SECTION 00 31 10B AND SECTION 32 11 23.
3. FOR SIDEWALK CONCRETE ELEVATIONS AND GRADING EXTENTS, SEE SITE PLAN SHEETS.

SIDEWALK CONCRETE (2 / 54-62)
NTS

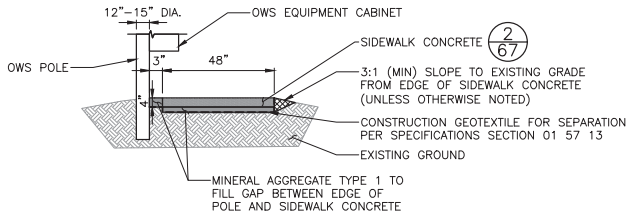

NOTES:

1. FOR OWS POLE AND EQUIPMENT CABINET DETAILS, SEE OWS SYSTEM DETAILS SHEETS 98-104.
2. FOR MINERAL AGGREGATE TYPE 1 GRADATION AND PLACEMENT, SEE SPECIFICATIONS SECTION 00 31 10B AND SECTION 32 11 23.
3. FOR SIDEWALK CONCRETE ELEVATIONS AND GRADING EXTENTS, SEE SITE PLAN SHEETS.

SIREN POLE - PAD ELEVATION (3 / 54-56)
NTS

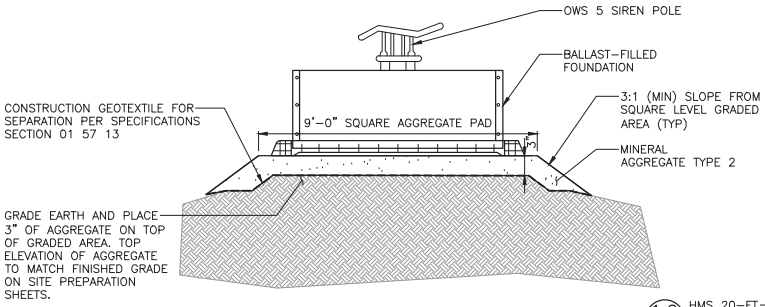

NOTES:

1. PRIOR TO PLACEMENT OF MINERAL AGGREGATE, GRADE GROUND LEVEL PER ELEVATIONS AND EXTENTS SHOWN ON SITE PREPARATION SHEETS.
2. FOR MINERAL AGGREGATE TYPE 2 GRADATION, SEE SPECIAL PROVISION 00 31 10B.
3. FOR OWS 5 POLE AND FOUNDATION DETAILS, SEE SHEETS 106 - 109.

OWS 5 GROUND PREPARATION (4 / 53)
NTS

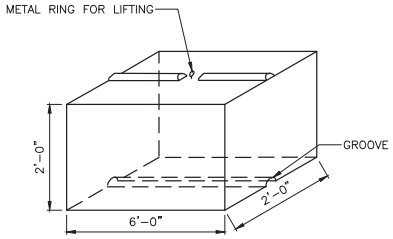

ECOLOGY BLOCK, CONCRETE (5 / 53)
NTS

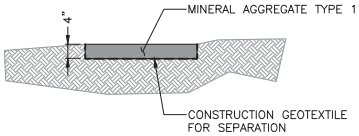

NOTES:

1. FOR MINERAL AGGREGATE TYPE 1 GRADATION AND PLACEMENT, SEE SPECIFICATIONS SECTION 00 31 10B AND SECTION 32 11 23.
2. FOR GRAVEL PAD OR PATH EXTENTS, SEE SITE PLAN SHEETS.

GRAVEL MAINTENANCE AREA (6 / 64, 65)
NTS

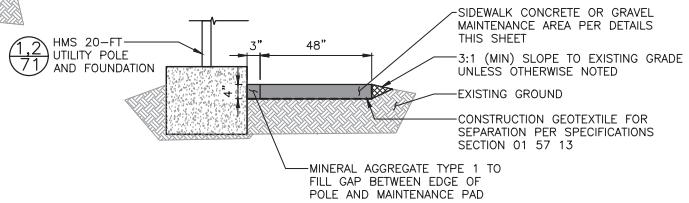

HMS POLE - PAD ELEVATION (7 / 57-59, 62, 64-65)
NTS

VAULT SERIAL #	DATE	MARK	NATURE REVISIONS	MADE	CHK'D	REV'D
58,584						

100% SUBMITTAL (NOT FOR CONSTRUCTION)

SITE DETAILS - 1

ADCOMM Engineering LLC

OSBORN CONSULTING INCORPORATED

APPROVED FOR ADVERTISING
LIZ ALZEER
DEPARTMENT OF FINANCE & ADMINISTRATIVE SERVICES
SEATTLE, WASHINGTON . . . . . 20 . . .
BY: . . . . . .
CITY PURCHASING & CONTRACTING SERVICES DIRECTOR

INITIALS AND DATE			INITIALS AND DATE	
DESIGNED JSG	6/01/22		REVIEWED: DES.	CONST.
CHECKED DLJ	6/01/22		SDOT	PROJ. MGR.
DRAWN JAR	6/01/22		RECEIVED	
CHECKED JSG	6/01/22		REVISED AS BUILT	

ALL WORK SHALL BE DONE IN ACCORDANCE WITH THE CITY OF SEATTLE STANDARD PLANS AND SPECIFICATIONS AND OTHER DOCUMENTS CALLED FOR IN SECTION 0-02.3 OF THE PROJECT MANUAL.

DALLAS G. LOVATICH, STATE OF WASHINGTON, 53915, REGISTERED PROFESSIONAL ENGINEER

Seattle Public Utilities

ORDINANCE NO. PW NO. 2022-029

SCALE: NTS

TOLT DAM EARLY WARNING SYSTEM - OTHER PROJECT COMPONENTS

CBB	PC C115120 / CO
VPI #	785-45
	C-201
SHEET	67 OF 134

C:\pw_pol_working\osbornconsulting-pw.bentley.com_osbornconsulting-pw-01\jacob romero\dms26270\C-201.dwg
jacobr May-31-22 11:53am

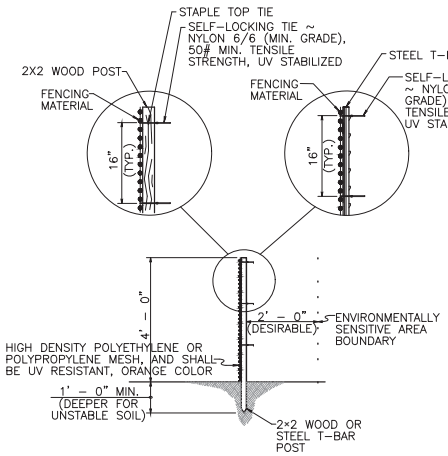

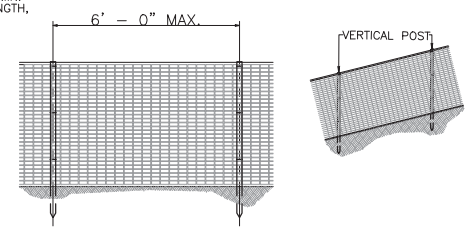

NOTE:

1. POSTS MUST HAVE SUFFICIENT STRENGTH AND DURABILITY TO SUPPORT THE FENCE THROUGH THE LIFE OF THE PROJECT.

HIGH VISIBILITY FENCE (1/49)
NTS

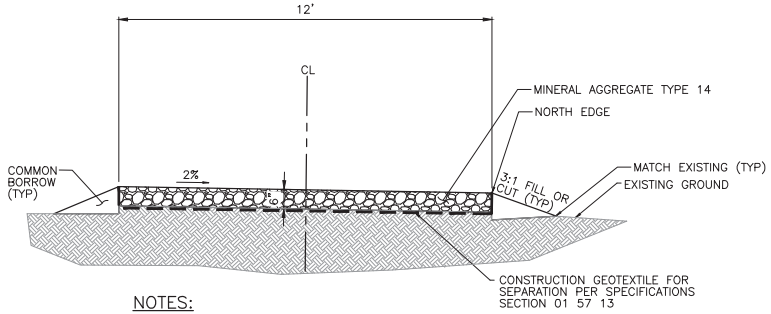

NOTES:

1. FOR MINERAL AGGREGATE TYPE 14 GRADATION AND PLACEMENT, SEE SPECIFICATIONS SECTION 00 31 10B AND SECTION 32 11 23.
2. FOR ACCESS ROAD PROFILE DETAILS, SEE THIS SHEET.
3. FOR ROAD CENTERLINE ALIGNMENT DATA, SEE SHEET 54.

OWS 6 ACCESS ROAD SECTION (2/54)
NTS

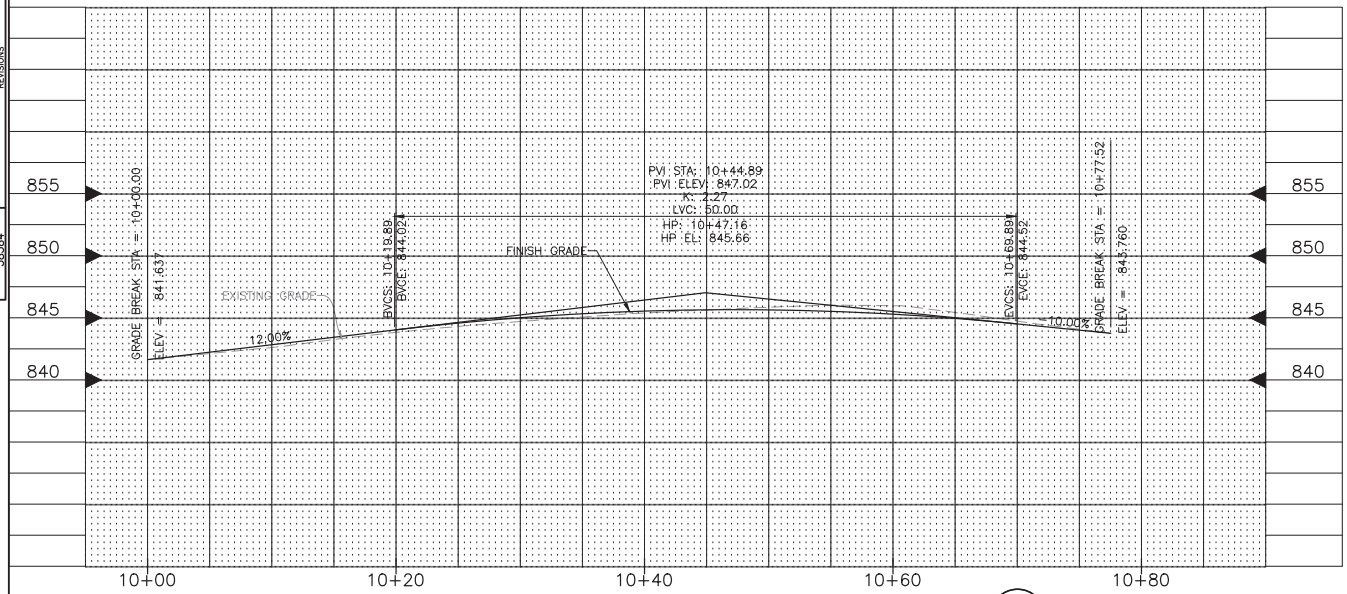

OWS 6 ACCESS ROAD CENTERLINE PROFILE (3/54)
NTS

100% SUBMITTAL (NOT FOR CONSTRUCTION)

SITE DETAILS – 2

VAULT SERIAL #	DATE	MARK	NATURE	MADE	CHK'D	REV'D
38384			REVISIONS			

ADCOMM Engineering LLC

OSBORN CONSULTING INCORPORATED

APPROVED FOR ADVERTISING
LIZ ALZEER
DEPARTMENT OF FINANCE & ADMINISTRATIVE SERVICES
SEATTLE, WASHINGTON . . . . . 20 . . .
BY: . . . . . .
CITY PURCHASING & CONTRACTING SERVICES DIRECTOR

INITIALS AND DATE		
DESIGNED	JSG	6/01/22
CHECKED	DLJ	6/01/22
DRAWN	JAR	6/01/22
CHECKED	JSG	6/01/22

INITIALS AND DATE	
REVIEWED:	
DES.	CONST.
SDOT	PROJ. MGR.
RECEIVED	
REVISED AS BUILT	

ALL WORK SHALL BE DONE IN ACCORDANCE WITH THE CITY OF SEATTLE STANDARD PLANS AND SPECIFICATIONS AND OTHER DOCUMENTS CALLED FOR IN SECTION 0-02.3 OF THE PROJECT MANUAL.

DANIEL GLOVACH
STATE OF WASHINGTON
53915
REGISTERED PROFESSIONAL ENGINEER

Seattle Public Utilities

ORDINANCE NO. PW NO. 2022-029

SCALE: NTS

TOLT DAM EARLY WARNING SYSTEM – OTHER PROJECT COMPONENTS

CBB	PC C115120 CO
VPI #	785-45
	C-202
SHEET	68 OF 134

C:\pw_pcl_working\jsg\osbornconsulting-pw-bentley.com_osbornconsulting-pw-01\jacob romero\dms26270\C-202.dwg
jacobr May-31-22 11:54am

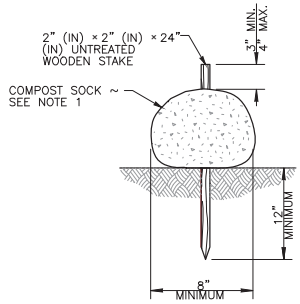

COMPOST SOCK DETAIL

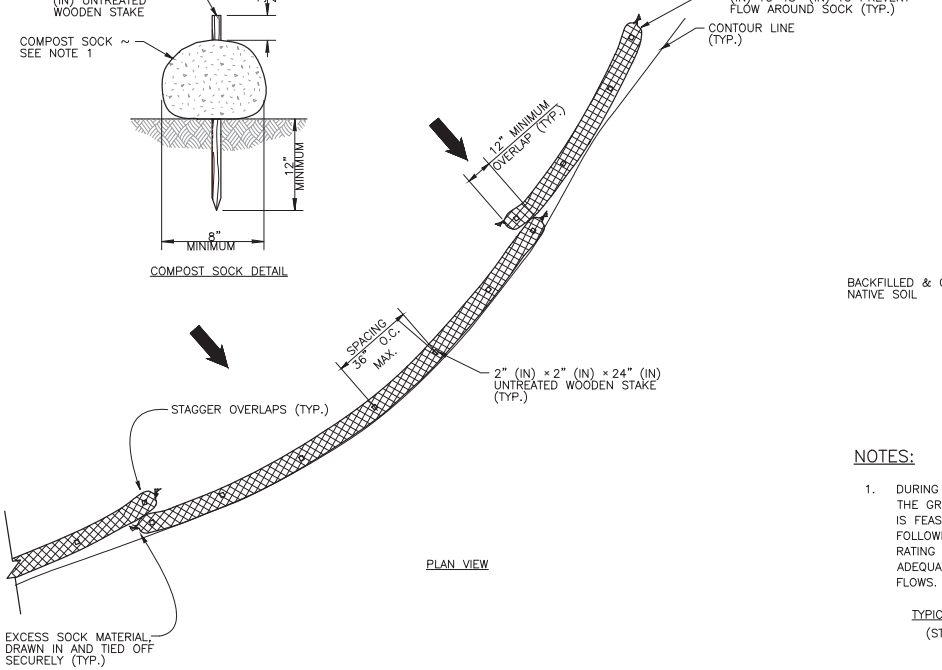

PLAN VIEW

NOTES:

1. COMPOST SOCK MUST BE IN ACCORDANCE WITH WSDOT STANDARD SPECIFICATION SECTION 9-14.5(6).
2. SECURELY KNOT EACH END OF COMPOST SOCK. OVERLAP ADJACENT COMPOST ENDS 12" (IN) BEHIND ONE ANOTHER AND SECURELY TIE TOGETHER.
3. COMPOST TO BE DISPERSED ON SITE AS DETERMINED BY THE ENGINEER WHEN VEGETATION COVERS THE SURFACE.
4. INSTALL COMPOST SOCK PERPENDICULAR TO FLOW ALONG CONTOURS.
5. REMOVE SEDIMENT FROM THE UP SLOPE SIDE OF THE COMPOST SOCK WHEN ACCUMULATION HAS REACHED 1/2 OF THE EFFECTIVE HEIGHT OF THE COMPOST SOCK WITHOUT COMPROMISING THE INTENDED FUNCTION OF THE COMPOST SOCK PER WSDOT STANDARD SPECIFICATION, SECTION 8-01.3(12) AS DETERMINED BY THE ENGINEER.
6. PERFORM MAINTENANCE IN ACCORDANCE WITH WSDOT STANDARD SPECIFICATION, SECTION 8-01.3(15).
7. REFER TO WSDOT STANDARD SPECIFICATION, SECTION 8-01.3(16) FOR REMOVAL.

COMPOST SOCK (1) NTS
40, 41, 43, 45-52

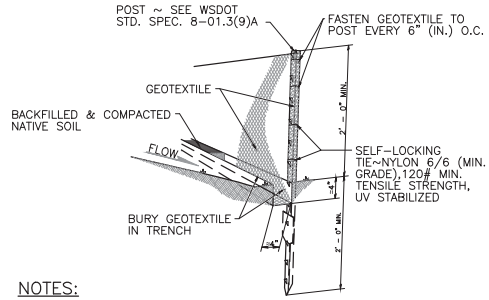

NOTES:

1. DURING EXCAVATION, MINIMIZE DISTURBING THE GROUND AROUND TRENCH AS MUCH AS IS FEASIBLE, AND SMOOTH SURFACE FOLLOWING EXCAVATION TO AVOID CONCENT-RATING FLOWS. COMPACTION MUST BE ADEQUATE TO PREVENT UNDERCUTTING FLOWS.

TYPICAL INSTALLATION DETAIL
(STEEL POSTS SHOWN)

NOTES:

1. INSTALL THE ENDS OF THE SILT FENCE TO POINT UP SLOPE TO PREVENT SEDIMENT FROM FLOWING AROUND THE ENDS OF THE FENCE.
2. PERFORM MAINTENANCE IN ACCORDANCE WITH WSDOT STANDARD SPECIFICATIONS 8-01.3(9)A AND 8-01.3(15).
3. SPLICES MUST NEVER BE PLACED IN LOW SPOTS OR SUMP LOCATIONS. IF SPLICES ARE LOCATED IN LOW OR SUM AREAS, THE FENCE MAY NEED TO BE REINSTALLED UNLESS THE PROJECT ENGINEER APPROVES THE INSTALLATION.
4. INSTALL SILT FENCING PARALLEL TO MAPPED CONTOUR LINES.
5. DURING EXCAVATION, MINIMIZE DISTURBING THE GROUND AROUND THE TRENCH AS MUCH AS IS FEASIBLE, AND SMOOTH SURFACE FOLLOWING EXCAVATION TO AVOID CONCENTRATING FLOWS. COMPACTION MUST BE ADEQUATE TO PREVENT UNDERCUTTING FLOWS.

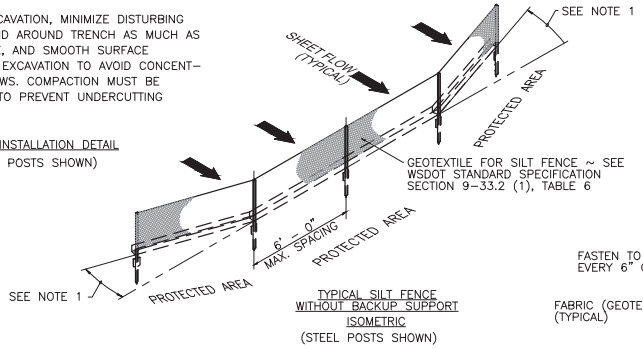

TYPICAL SILT FENCE WITHOUT BACKUP SUPPORT
ISOMETRIC
(STEEL POSTS SHOWN)

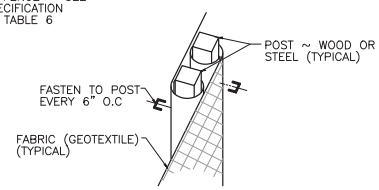

SPLICED FENCE SECTIONS SHALL BE CLOSE ENOUGH TOGETHER TO PREVENT SILT LADEN WATER FROM ESCAPING THROUGH THE FENCE AT THE OVERLAP.

SPLICE DETAIL
(WOOD POSTS SHOWN)

SILT FENCE (2) NTS
42, 44

VAULT SERIAL #	DATE	MARK	NATURE REVISIONS	MADE	CHK'D	REV'D
383-364						

100% SUBMITTAL (NOT FOR CONSTRUCTION)

SITE DETAILS – 3

ADCOMM Engineering LLC
OSBORN CONSULTING INCORPORATED

APPROVED FOR ADVERTISING
LIZ ALZEER
DEPARTMENT OF FINANCE & ADMINISTRATIVE SERVICES
SEATTLE, WASHINGTON . . . . . 20 . . .
BY: . . . . . .
CITY PURCHASING & CONTRACTING SERVICES DIRECTOR

INITIALS AND DATE		
DESIGNED	JSG	6/01/22
CHECKED	DLJ	6/01/22
DRAWN	JAR	6/01/22
CHECKED	JSG	6/01/22

INITIALS AND DATE	
REVIEWED:	
DES.	CONST.
SDOT	PROJ. MGR.
RECEIVED	
REVISED AS BUILT	

ALL WORK SHALL BE DONE IN ACCORDANCE WITH THE CITY OF SEATTLE STANDARD PLANS AND SPECIFICATIONS AND OTHER DOCUMENTS CALLED FOR IN SECTION 0-02.3 OF THE PROJECT MANUAL.

ALLA GLOVACH STATE OF WASHINGTON 53915 REGISTERED PROFESSIONAL ENGINEER

Seattle Public Utilities
ORDINANCE NO. PW NO. 2022-029
SCALE: NTS

TOLT DAM EARLY WARNING SYSTEM – OTHER PROJECT COMPONENTS

CIP	PC C115120
	CO
VPI #	785-45
	C-203
SHEET	69 OF 134

C:\pw_pcl_working\jsc\osborncontsulting-pw.bentley.com_osborncontsulting-pw-01\jscob romero\dms26270\C-203.dwg
jscob May-31-22 11:54am

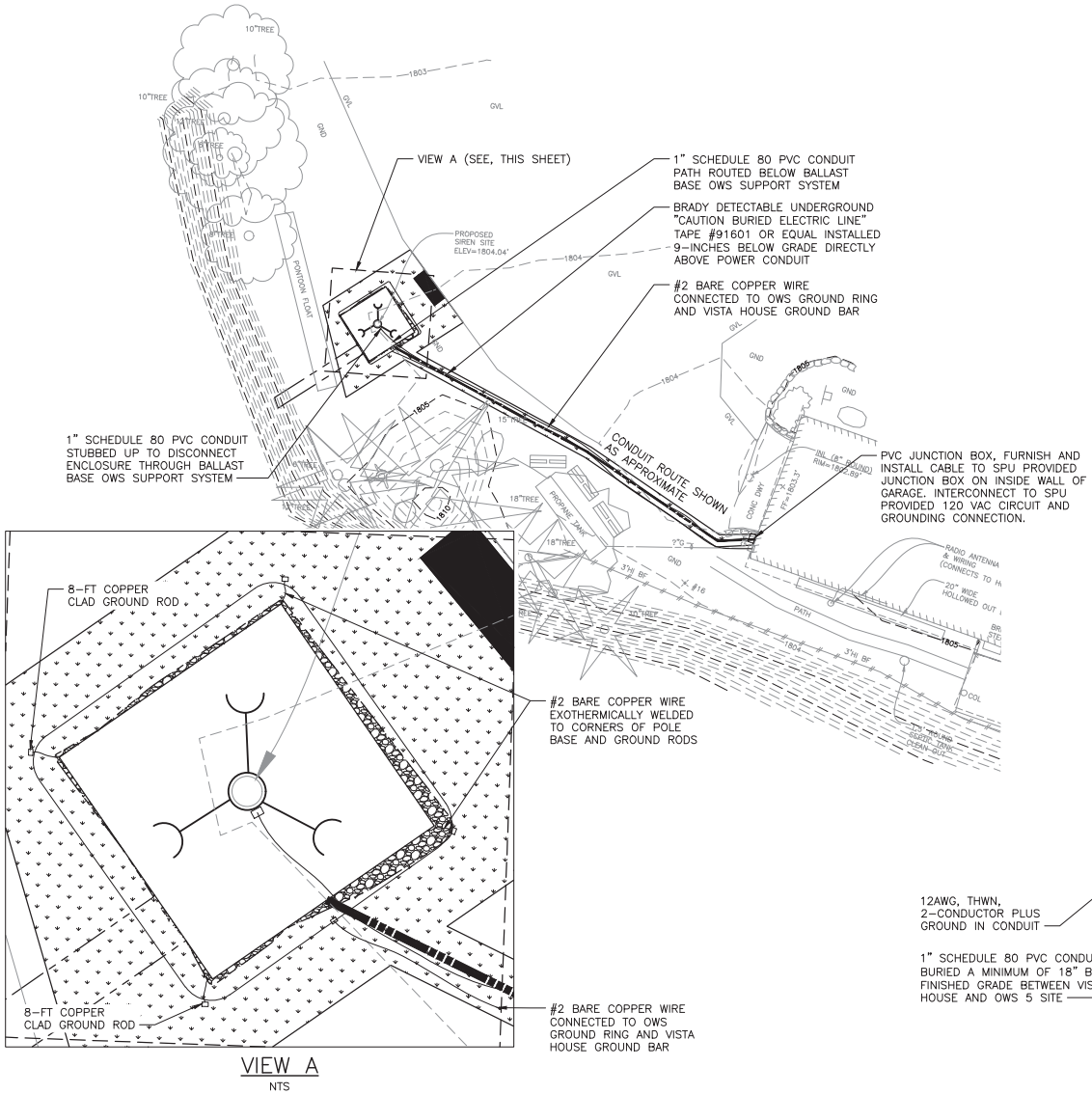

VIEW A

NTS

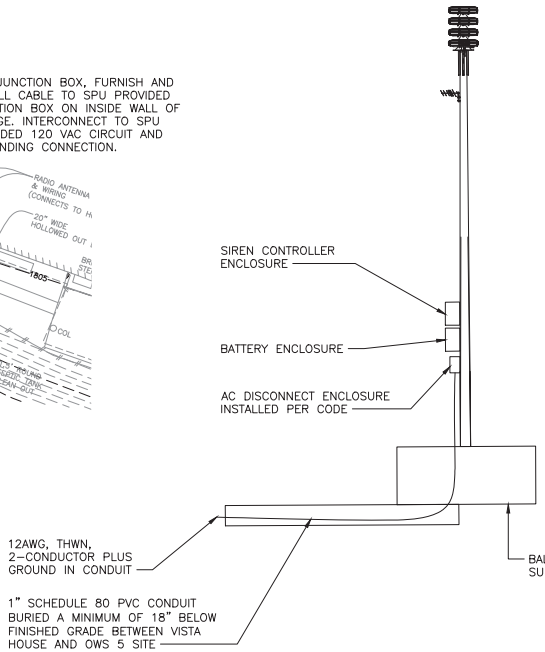

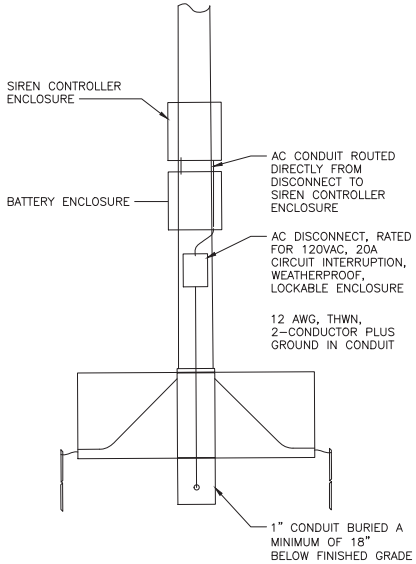

VAULT SERIAL #	DATE	MARK	NATURE	MADE	CHK'D	REV'D
SS-364			REVISIONS			

100% SUBMITTAL (NOT FOR CONSTRUCTION)

FINAL ELECTRICAL PLAN – OWS 5

ADCOMM Engineering LLC

APPROVED FOR ADVERTISING
LIZ ALZEER
DEPARTMENT OF FINANCE & ADMINISTRATIVE SERVICES
SEATTLE, WASHINGTON . . . . . 20 . . .

BY: . . . . . .
CITY PURCHASING & CONTRACTING SERVICES DIRECTOR

INITIALS AND DATE		
DESIGNED	TK	6/01/22
CHECKED	JPB	6/01/22
DRAWN	TK	6/01/22
CHECKED	JPB	6/01/22

INITIALS AND DATE	
REVIEWED:	
DES.	CONST.
SDOT	PROJ. MGR.
RECEIVED	
REVISED AS BUILT	

ALL WORK SHALL BE DONE IN ACCORDANCE WITH THE CITY OF SEATTLE STANDARD PLANS AND SPECIFICATIONS AND OTHER DOCUMENTS CALLED FOR IN SECTION 0-02.3 OF THE PROJECT MANUAL.

JOSEPH P. BLASCHKA, STATE OF WASHINGTON, 17853, REGISTERED PROFESSIONAL ENGINEER

Seattle Public Utilities

ORDINANCE NO. PW NO. 2022-029

SCALE: NTS

TOLT DAM EARLY WARNING SYSTEM – OTHER PROJECT COMPONENTS

CPDB PC	C115120
CO	
VPI #	785-45
	E-101
SHEET	76 OF 134

C:\pw_pol_working\jpb\osborncomsulting-pw.bentley.com_osborncomsulting-pw-01\jacob romero\dms26270\E-101.dwg
jacobr May-31-22 11:55am

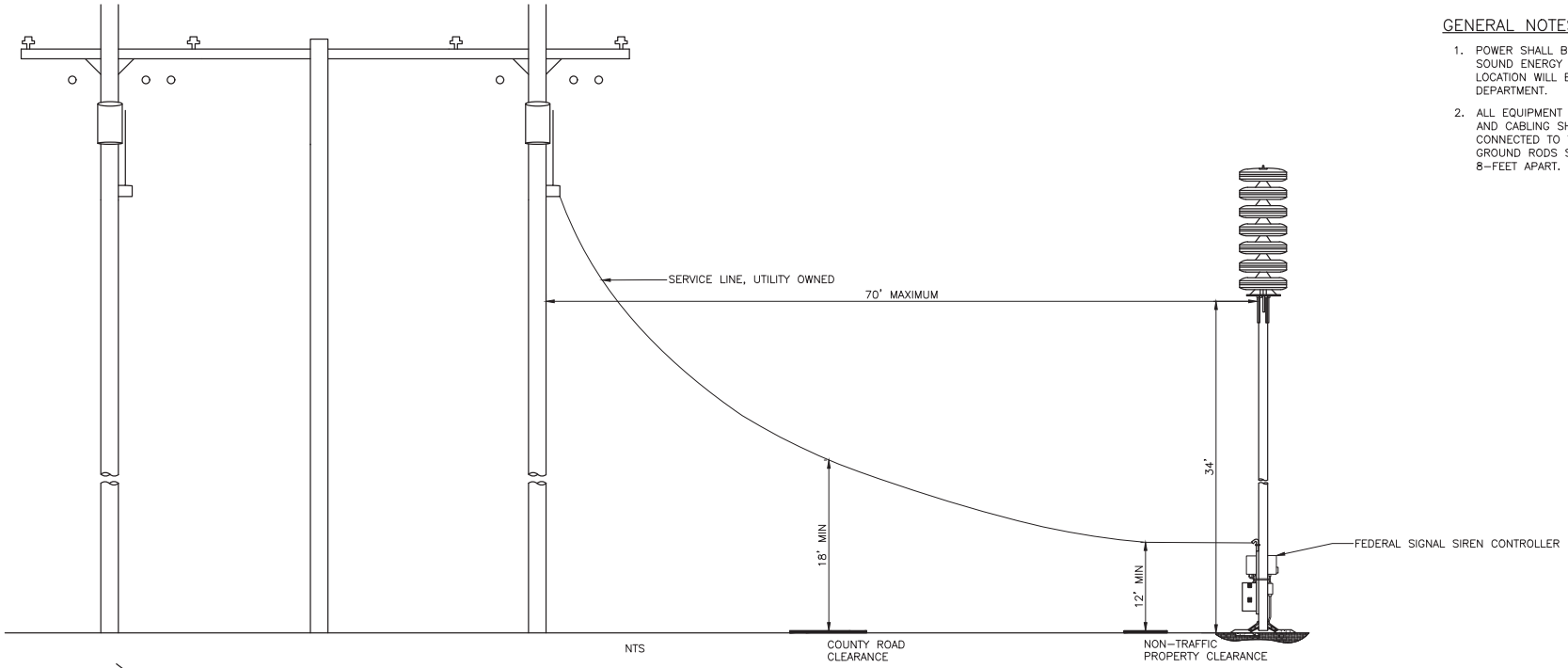

GENERAL NOTES:

1. POWER SHALL BE OBTAINED FROM THE NEW PUGET SOUND ENERGY TRANSFORMER. FINAL TRANSFORMER LOCATION WILL BE DETERMINED BY PSE ENGINEERING DEPARTMENT.
2. ALL EQUIPMENT CABINETS, ANTENNAS, SIREN ASSEMBLY AND CABLING SHALL BE BONDED TOGETHER AND CONNECTED TO THE TWO GROUND RODS. THE TWO GROUND RODS SHALL BE PLACED A MINIMUM OF 8-FEET APART.

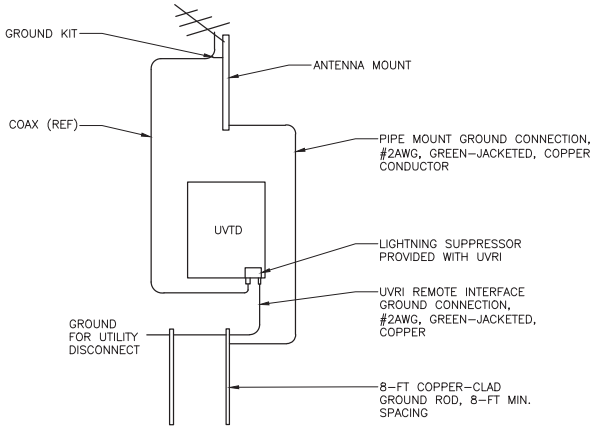

NEW EQUIPMENT GROUNDING

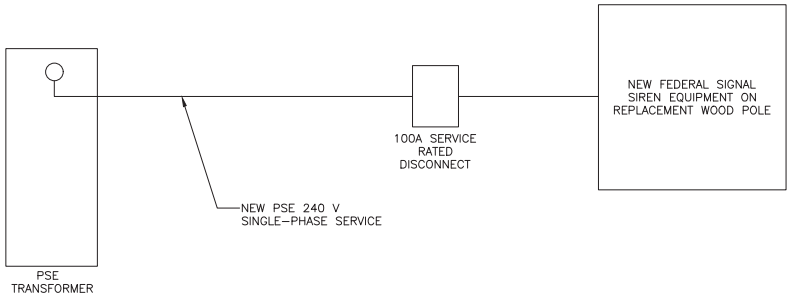

1 LINE

100% SUBMITTAL (NOT FOR CONSTRUCTION)

FINAL ELECTRICAL PLAN – OWS 6

VAULT SERIAL #	DATE	MARK	NATURE REVISIONS	MADE	CHK'D	REV'D
SS-364						

ADCOMM Engineering LLC

APPROVED FOR ADVERTISING
LIZ ALZEER
DEPARTMENT OF FINANCE & ADMINISTRATIVE SERVICES
SEATTLE, WASHINGTON . . . . . 20 . . .
BY: . . . . . .
CITY PURCHASING & CONTRACTING SERVICES DIRECTOR

INITIALS AND DATE		
DESIGNED	TK	6/01/22
CHECKED	JPB	6/01/22
DRAWN	TK	6/01/22
CHECKED	JPB	6/01/22

INITIALS AND DATE	
REVIEWED:	
DES.	CONST.
SDOT	PROJ. MGR.
RECEIVED	
REVISED AS BUILT	

ALL WORK SHALL BE DONE IN ACCORDANCE WITH THE CITY OF SEATTLE STANDARD PLANS AND SPECIFICATIONS AND OTHER DOCUMENTS CALLED FOR IN SECTION 0-02.3 OF THE PROJECT MANUAL.

STATE OF WASHINGTON — JOSEPH P. BLASCICA — 17853 — REGISTERED PROFESSIONAL ENGINEER

Seattle Public Utilities

ORDINANCE NO. PW NO. 2022-029

SCALE: NTS

TOLT DAM EARLY WARNING SYSTEM – OTHER PROJECT COMPONENTS

CIP	PC C115120
	CO
VPI #	785-45
	E-102
SHEET	77 OF 134

C:\pw_oc1_working\jpb\osborneconsulting-pw.bentley.com__osborneconsulting-pw-01\jacob romero\dms26270\E-102.dwg
jacobr May-31-22 2:12pm

PROPANE GAS LINE AND REGULATOR IN THIS AREA. WORK WITH CAUTION. SHUT PROPANE OFF PRIOR TO ANY WORK IN THIS AREA.

INSTALL 1" SCHD 80 PVC CONDUIT AT THIS APPROXIMATE LOCATION. COORDINATE WITH LOCATION OF SPU JUNCTION BOX ON INSIDE WALL.

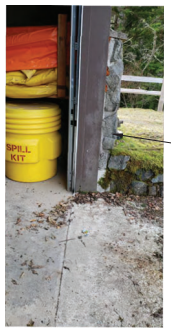

INSTALL 1" SCHD 80 PVC CONDUIT AT THIS APPROXIMATE LOCATION. COORDINATE WITH LOCATION OF SPU JUNCTION BOX ON INSIDE WALL.

INSTALL 1" SCHD 80 PVC CONDUIT AT THIS APPROXIMATE LOCATION. ROUTE TO SPU PROVIDED JUNCTION BOX. COORDINATE WITH LOCATION OF SPU JUNCTION BOX ON INSIDE WALL. INTERCONNECT THE 120 VAC CIRCUIT AND GROUNDING CONNECTION AT THIS LOCATION.

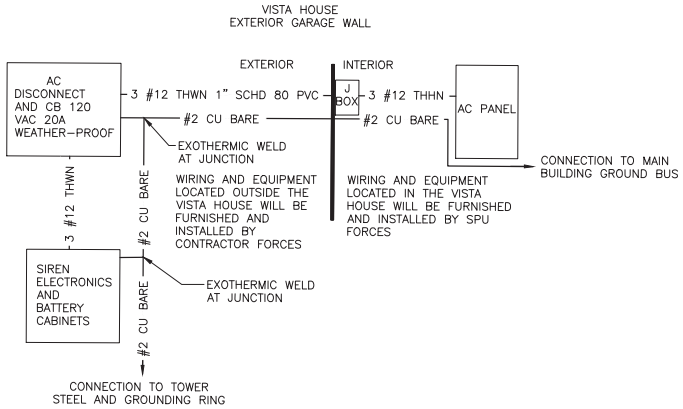

ELECTRICAL 1-LINE DIAGRAM

NTS

VAULT SERIAL #	DATE	MARK	NATURE	MADE BY	CHK'D	REV'D
38384			REVISIONS			

C:\pw_pci_working\ft\osborneconsulting-pw-01\jacob romero\dms26270\E-201.dwg
jacobr May-31-22 11:56am

100% SUBMITTAL (NOT FOR CONSTRUCTION)

ELECTRICAL DETAILS – OWS 5

ADCOMM Engineering LLC

APPROVED FOR ADVERTISING
LIZ ALZEER
DEPARTMENT OF FINANCE & ADMINISTRATIVE SERVICES
SEATTLE, WASHINGTON . . . . . 20 . . .
BY: . . . . . .
CITY PURCHASING & CONTRACTING SERVICES DIRECTOR

INITIALS AND DATE		
DESIGNED	TK	6/01/22
CHECKED	JPB	6/01/22
DRAWN	TK	6/01/22
CHECKED	JPB	6/01/22

INITIALS AND DATE	
REVIEWED:	
DES.	CONST.
SDOT	PROJ. MGR.
RECEIVED	
REVISED AS BUILT	

ALL WORK SHALL BE DONE IN ACCORDANCE WITH THE CITY OF SEATTLE STANDARD PLANS AND SPECIFICATIONS AND OTHER DOCUMENTS CALLED FOR IN SECTION 0-02.3 OF THE PROJECT MANUAL.

JOSEPH P. BLASCHKA, STATE OF WASHINGTON, 17853, REGISTERED PROFESSIONAL ENGINEER

Seattle Public Utilities

ORDINANCE NO. PW NO. 2022-029

SCALE: NTS

TOLT DAM EARLY WARNING SYSTEM – OTHER PROJECT COMPONENTS

JOB	PC CO	C115120
VPI #		785-45
		E-201
SHEET		83 OF 134

POWER SYMBOLS

- T — UTILITY TRANSFORMER

CIRCUITING SYMBOLS

- NEW WIRING. HASH MARKS INDICATE NUMBER OF #12 AWG WIRE UNLESS OTHERWISE NOTED, OTHERWISE, NO HASH MARKS INDICATES TWO WIRES PLUS GROUND UNLESS NOTED OTHERWISE. LONG HASH MARKS DENOTES NEUTRAL.
  - INDICATES GROUND WIRE.
  - INDICATES ISOLATED GROUND WIRE, WHERE SHOWN.
- NEW WIRING RUN IN OR BELOW SLAB OR BELOW GRADE.
- RACEWAY STUB-OUT WITH BUSHING
- HOME RUN TO PANEL OR LOCATION NOTED
- CIRCUIT CONTINUATION
- JUNCTION BOX, CEILING/WALL
- EXISTING RACEWAY OR WIRING (IF HASH MARKS ARE SHOWN PULL NEW CONDUCTORS)
- P/T — POWER/TELCO IN COMMON TRENCH
- G — GROUND WIRE: BARE #2 AWG COPPER WIRE, UNO

RISER SYMBOLS

- CIRCUIT BREAKER
- M — UTILITY METER

MISCELLANEOUS

- FLAG NOTE
- REVISION SYMBOL
- EXISTING EQUIPMENT OR DEVICE
- /// XXX — REMOVE EXISTING ELECTRICAL EQUIPMENT
- XXX — EQUIPMENT IDENTIFIER

GROUNDING SYMBOLS

- GROUND ROD
- GROUND TEST WELL
- GROUND BAR
- GROUND SYSTEM ACCESS POINT, SEE DETAIL 6, E-2.1

ABBREVIATIONS

AFF	ABOVE FINISHED FLOOR	N	NEUTRAL
A, AMP	AMPERE	P	POLE
AWG	AMERICAN WIRE GAGE	PNL	PANEL
CB	CIRCUIT BREAKER	RO	RACEWAY ONLY
CKT	CIRCUIT	REC	RECEPTACLE
DED	DEDICATED	TELE	TELEPHONE
(E)	EXISTING	TTB	TELEPHONE TERMINAL BOARD
FA	FIRE ALARM	TYP	TYPICAL
FBOIC	FURNISHED BY OTHERS, INSTALLED BY CONTRACTOR	UNO	UNLESS NOTED OTHERWISE
G, GND	GROUND	V	VOLT
GFI, GFCI	GROUND FAULT CIRCUIT INTERRUPTER	W	WIRE OR WATT
HT	HEIGHT	ø	PHASE
J-BOX	JUNCTION BOX	W/O	WITHOUT
LCP	LIGHTING CONTROL PANEL		

DRAWING INDEX

E-0-OH	SYMBOLS AND ABBREVIATIONS, ONE-LINE DIAGRAM
E-1.0-OH	ELECTRICAL SITE PLAN
E-2.0-OH	GROUNDING PLAN
E-2.1-OH	GROUNDING DETAILS
E-2.2-OH	GROUNDING DETAILS

SYMBOLS AND ABBREVIATIONS

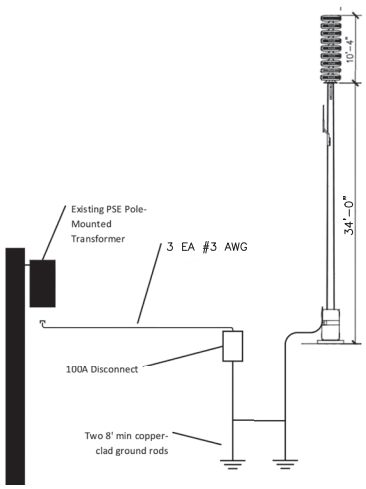

GENERAL NOTES:

1. EACH TEMPORARY OWS WILL HAVE A SERVICE DISCONNECT REQUIRING GROUNDING PER NEC. A MINIMUM OF TWO GROUND RODS IS REQUIRED FOR EACH SITE. NEC REQUIRES A 6-FT MINIMUM SPACING HOWEVER 16-FT MINIMUM IS REQUIRED BY THIS WORK IF THE SITE FOOTPRINT ALLOWS.
2. THE TEMPORARY POLE SHALL BE GROUNDED TO THE GROUND RODS.
3. SITES OWS 6 AND 10 ARE EXPECTED TO HAVE OVERHEAD POWER. PSE REQUIREMENTS FOR OVERHEAD POWER ARE SHOWN.

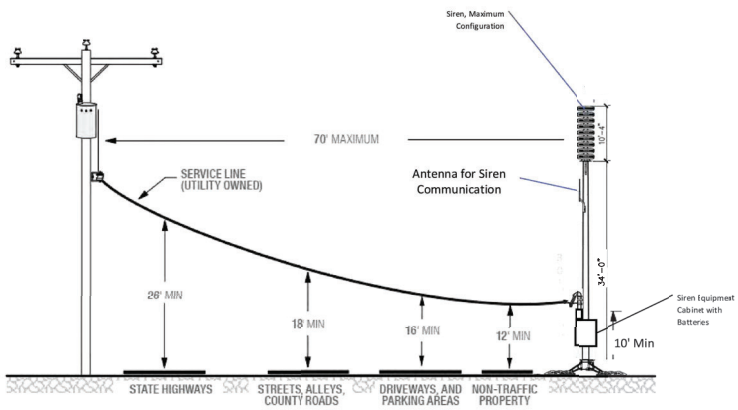

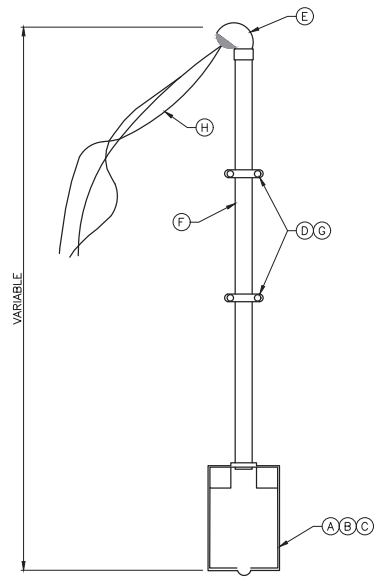

(#) MATERIALS

A. NEMA 3R STEEL 100A SERVICE DISCONNECT LISTED BOX
B. 240 VAC 100A SERVICE DISCONNECT RATED BREAKERS
C. 120 VAC 20A GFCI BREAKER TO FEED FS EQUIPMENT.
D. GALVANIZED STEEL CLAMPS
E. WEATHER HEAD
F. 1-1/2" GALVANIZED RMC STEEL CONDUIT
G. GALVANIZED STEEL HARDWARE FOR CLAMPS
H. THREE #3 CU, SE RATED 1-WHITE, 1-BLACK, AND 1-GREEN

VAULT SERIAL #	DATE	MARK	NATURE	MADE	CHK'D	REV'D
38,384			REVISIONS			

100% SUBMITTAL (NOT FOR CONSTRUCTION)

ELECTRICAL DETAILS – OWS 6, 9, AND 10

ADCOMM Engineering LLC

APPROVED FOR ADVERTISING
LIZ ALZEER
DEPARTMENT OF FINANCE & ADMINISTRATIVE SERVICES
SEATTLE, WASHINGTON . . . . . 20 . . .
BY: . . . . . .
CITY PURCHASING & CONTRACTING SERVICES DIRECTOR

INITIALS AND DATE			INITIALS AND DATE
DESIGNED	TK	6/01/22	REVIEWED: DES. SDOT / CONST. PROJ. MGR.
CHECKED	JPB	6/01/22	
DRAWN	TK	6/01/22	RECEIVED
CHECKED	JPB	6/01/22	REVISED AS BUILT

ALL WORK SHALL BE DONE IN ACCORDANCE WITH THE CITY OF SEATTLE STANDARD PLANS AND SPECIFICATIONS AND OTHER DOCUMENTS CALLED FOR IN SECTION 0-02.3 OF THE PROJECT MANUAL.

STATE OF WASHINGTON — JOSEPH P. BLASCHKA — 17853 — REGISTERED PROFESSIONAL ENGINEER

Seattle Public Utilities

ORDINANCE NO. PW NO. 2022-029

SCALE: NTS

TOLT DAM EARLY WARNING SYSTEM – OTHER PROJECT COMPONENTS

CBB PC CO	C115120
VPI #	785-45
	E-202
SHEET	84 OF 134

C:\pw_pcl_workingdir\osbornconsulting-pw.bentley.com__osbornconsulting-pw-01\jacob romero\dms26270\E-202.dwg
jacobr May-31-22 11:56am

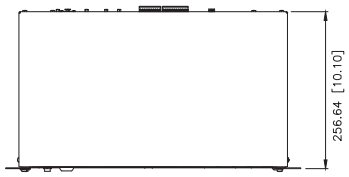

TOP VIEW

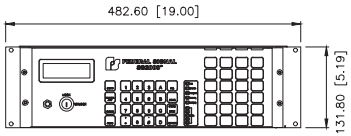

FRONT VIEW

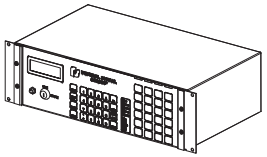

ISOMETRIC VIEW

GENERAL NOTES:

1. THE PSERN SWAN SHELTER IS LOCATED AT COORDINATES 47–42–23.6 N121–49–01.7 W.
2. ALL WORK AT THE SWAN SITE SHALL BE COORDINATED WITH THE SITE OWNER PRIOR TO STARTING WORK.
3. ALL INSTALLATION AND GROUNDING WORK SHALL COMPLY WITH MOTOROLA R56 INSTALLATION AND GROUNDING STANDARDS.
4. ALL EQUIPMENT SHALL BE POWERED FROM THE PSERN –48 VDC POWER SUPPLY.

SPECIFICATIONS

LINE INPUT:	–48VDC TO 12VDC CONVERTER SUPPLIED
BATTERY INPUT:	11.5–20.0VDC (OVERVOLTAGE AND REVERSE VOLTAGE PROTECTION)
INPUT CURRENT:	175mA STANDBY, 250mA MAX.
OPERATING TEMPERATURE:	32° F TO 122°F 0°C TO 50°C
DISTORTION:	< 3% FROM PURE SINEWAVE
EMPHASIS:	OPTIONAL DE–EMPHASIS 6DB/OCTAVE
DTMF FORMAT:	3–20 DIGITS
DTMF TIMING:	35/5 TO 999/999 MILLISECONDS (DIGIT LENGTH/INTERDIGIT SILENCE)
DISPLAY:	80–CHARACTER LCD DISPLAY (4 LINES X 20)
DTMF DECODE SENSITIVITY:	20DB SIGNAL/NOISE
OUTPUTS:	3–DPDT (PTT, AUDIO AND MIC DISCONNECT, SPARE) 1.25A AT 24VDC 0.4 AT 120VAC
DIMENSIONS:	RACKMOUNT 19.0" X 10.1" X 5.2" (482.6mm X 256.5mm X 131.8mm)
WEIGHT:	RACKMOUNT 6.5 lbs./3.0 kg

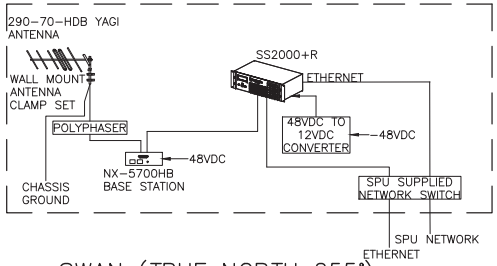

SWAN (TRUE NORTH 255°)

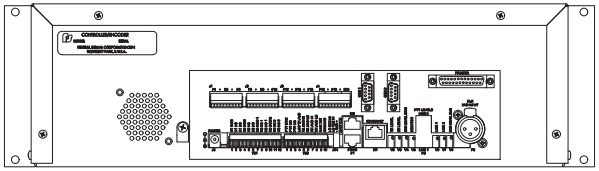

BACK VIEW

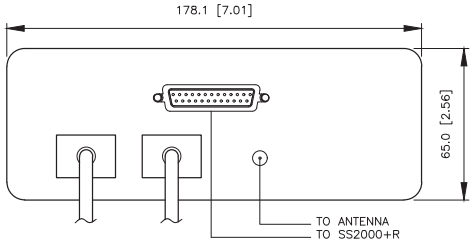

SPECIFICATIONS

VENDOR PART NUMBER:	KENWOOD NX–5700HB
FREQUENCY RANGE:	136–174MHz
NUMBER OF ZONES:	128
OPERATING TEMPERATURE:	–22°F TO +140°F (–30°C TO +60°C)
WEIGHT:	5.5kg (12.1lbs)
RF POWER OUTPUT:	110W TO 25W

UNITS: MILLIMETERS [INCHES]

BASE STATION RADIO

NTS

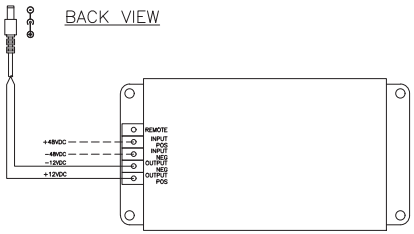

ICT206012–35AI2
48VDC TO 12VDC POWER CONVERTER

CONNECTIONS:

J1 – PRINTER PORT
J2 – SERIAL PORT – COM 2
J3 – SERIAL PORT – COM 1
J5 – DC POWER IN
J6 – LOCAL MIC INPUT
P1 UPPER – EXTERNAL I2C PORT
P1 LOWER – PROGRAMMING/FLASH PORT
P2 – LINE LEVEL INPUTS
P3 – BALANCED MIC INPUT
M1 – ETHERNET PORT
TB1 – RELAY OUTPUTS
TB2 – TRANSCEIVER INTERFACE

SS2000 R RACKMOUNT CONTROLLER

NTS

100% SUBMITTAL (NOT FOR CONSTRUCTION)

INSTALLATION PLAN – SWAN

VAULT SERIAL #	DATE	MARK	NATURE REVISIONS	MADE	CHK'D	REV'D
SS364						

ADCOMM Engineering LLC

APPROVED FOR ADVERTISING
LIZ ALZEER
DEPARTMENT OF FINANCE & ADMINISTRATIVE SERVICES
SEATTLE, WASHINGTON . . . . . 20 . . .
BY: . . . . . .
CITY PURCHASING & CONTRACTING SERVICES DIRECTOR

INITIALS AND DATE		
DESIGNED	TK	6/01/22
CHECKED	JPB	6/01/22
DRAWN	TK	6/01/22
CHECKED	JPB	6/01/22

INITIALS AND DATE	
REVIEWED:	
DES.	CONST.
SDOT	PROJ. MGR.
RECEIVED	
REVISED AS BUILT	

ALL WORK SHALL BE DONE IN ACCORDANCE WITH THE CITY OF SEATTLE STANDARD PLANS AND SPECIFICATIONS AND OTHER DOCUMENTS CALLED FOR IN SECTION 0–02.3 OF THE PROJECT MANUAL.

STATE OF WASHINGTON JOSEPH P. BLASCIA 17853 REGISTERED PROFESSIONAL ENGINEER

Seattle Public Utilities

ORDINANCE NO. PW NO. 2022–029

SCALE: NTS

TOLT DAM EARLY WARNING SYSTEM – OTHER PROJECT COMPONENTS

CBB	PC C115120
	CO
VPI #	785–45
	T-102
SHEET	87 OF 134

C:\pw_pcl_working\bf\osborneconsulting–pw.bentley.com__osborneconsulting–pw–01\jacob romero\dms26270\T–102.dwg
jacobr May–31–22 11:56am

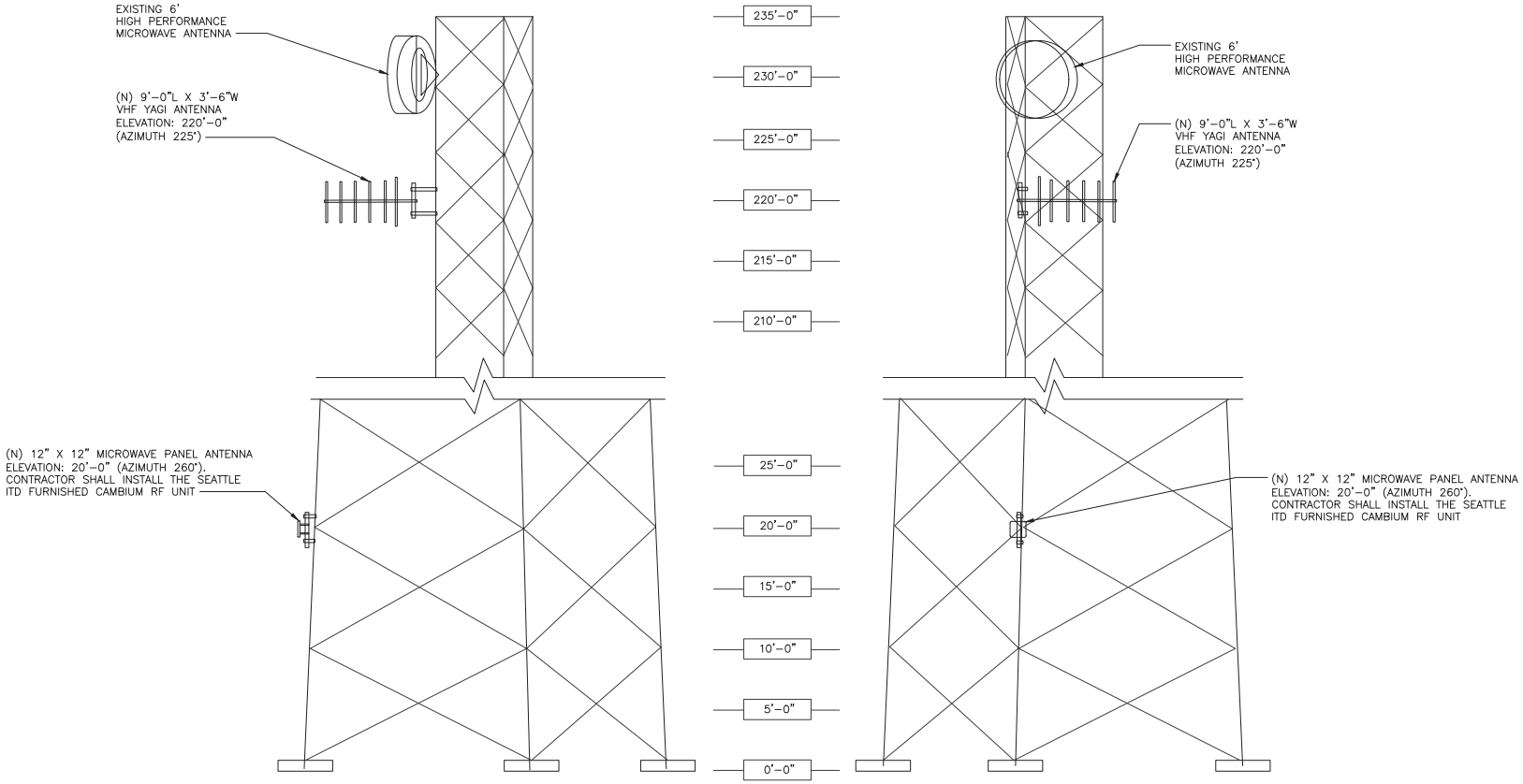

VIEW FROM SOUTH

VIEW FROM WEST

VAULT SERIAL #	DATE	MARK	NATURE	MADE	CHK'D	REV'D
35384			REVISIONS			

C:\pw_pol_working\osborncons\osborncons\ulting-pw.bentley.com_osborncons\ulting-pw-01\jacob romero\dms26270\T-103.dwg
jacobr May-31-22 11:56am

100% SUBMITTAL (NOT FOR CONSTRUCTION)

INSTALLATION PLAN – SWAN TOWER

ADCOMM Engineering LLC

APPROVED FOR ADVERTISING
LIZ ALZEER
DEPARTMENT OF FINANCE & ADMINISTRATIVE SERVICES
SEATTLE, WASHINGTON . . . . . 20 . . .

BY: . . . . . .
CITY PURCHASING & CONTRACTING SERVICES DIRECTOR

INITIALS AND DATE		
DESIGNED	TK	6/01/22
CHECKED	JPB	6/01/22
DRAWN	TK	6/01/22
CHECKED	JPB	6/01/22

INITIALS AND DATE
REVIEWED:
DES. CONST.
SDOT PROJ. MGR.
RECEIVED
REVISED AS BUILT

ALL WORK SHALL BE DONE IN ACCORDANCE WITH THE CITY OF SEATTLE STANDARD PLANS AND SPECIFICATIONS AND OTHER DOCUMENTS CALLED FOR IN SECTION 0-02.3 OF THE PROJECT MANUAL.

JOSEPH P. BLASCHKA
STATE OF WASHINGTON
17853
REGISTERED
PROFESSIONAL ENGINEER

Seattle Public Utilities

ORDINANCE NO. PW NO. 2022-029

SCALE: NTS

TOLT DAM EARLY WARNING SYSTEM – OTHER PROJECT COMPONENTS

CIP	PC CO	C115120
VPI #		785-45
		T-103
SHEET		88 OF 134

NOTE: REFER TO YAGI AND PANEL ANTENNA MOUNTING DETAILS DRAWINGS FOR TOWER–TO–MOUNT AND MOUNT–TO–ANTENNA HARDWARE ASSEMBLY INFORMATION.

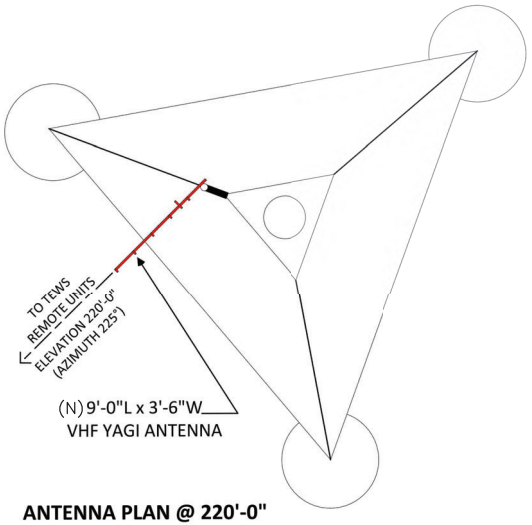

ANTENNA PLAN @ 220'-0"

ANTENNA / COAX SCHEDULE

RAD CENTER	PATH	MOUNTING HEIGHT	AZIMUTH	TOWER LEG	QTY.	DESCRIPTION	COAX	COAX LENGTH
230'–0"	RING HILL	–	288°	NW	1	6' HIGH PERFORMANCE MICROWAVE ANTENNA	EW63	±265'
100'–0"	TOLT	–	110°	SE	1	3' HIGH PERFORMANCE MICROWAVE ANTENNA	EW90	±135'
--	TEWS VHF	220'-0"	225°	NW	1	9'-0" x 3'-6" VHF YAGI ANTENNA	LDF5-50A	±275'
–	–	170'–0"	90°	NE	2	18'–0" ENCLOSED DIPOLE RX ANTENNAS	AVA5–50FX	±205'
20'-0"	WTR FLTRTN BLDG	20'-0"	260°	NW	1	1'-0" MICROWAVE ANTENNA	OSP CAT5E	±75'
–	–	150'–0"	90°	SE	2	4'–5" ENCLOSED DIPOLE TX ANTENNA	AVA5–50FX	±185'

NOTE:
PROVIDE (1) DUAL DIVERSITY TOWER TOP AMPLIFIER SYSTEM.
SYSTEM SHALL INCLUDE: (1) DUAL DIVERSITY TOWER TOP AMPLIFIER (TTA).
(4) 7/8" COAXIAL CABLES (2 LINES ARE JUMPERS FROM THE TTA TO ANTENNAS).
(1) 1/2" COAXIAL CABLE (FSJ4–50B).

GENERAL NOTES:

1. VERIFY EACH COAXIAL CABLE LENGTH, DIAMETER, ROUTING, AND ALL MOUNTING APPURTENANCES WITH OWNER PRIOR TO ORDER.
2. THE MAXIMUM COAXIAL CABLE LENGTH HAS BEEN ESTIMATED IN THE TABLE ABOVE. THIS CABLE LENGTH IS APPROXIMATE AND IS TO BE USED FOR CONSTRUCTION. ACTUAL ANTENNA CABLE LENGTHS MAY VARY FROM ESTIMATED MAXIMUM LENGTH AND MUST BE VERIFIED.
3. TAG ALL MAIN CABLES AT THREE (3) LOCATIONS:
   A – ANTENNAS
   B – WAVEGUIDE ENTRY PORT
   C – EQUIPMENT CABINET
4. EACH COAX SHALL BE GROUNDED AT (3) THREE LOCATIONS: ANTENNA, TOWER BASE AND BUILDING ENTRY PORT.

(N) CONTRACTOR SHALL INSTALL SEATTLE ITD FURNISHED CAMBIUM RF UNIT. CONTRACTOR SHALL FURNISH AND INSTALL ALL MOUNTS, CABLING, GROUNDING, AND TO THE SEATTLE ITD PROVIDE POWER UNIT INSIDE THE EQUIPMENT SHELTER.

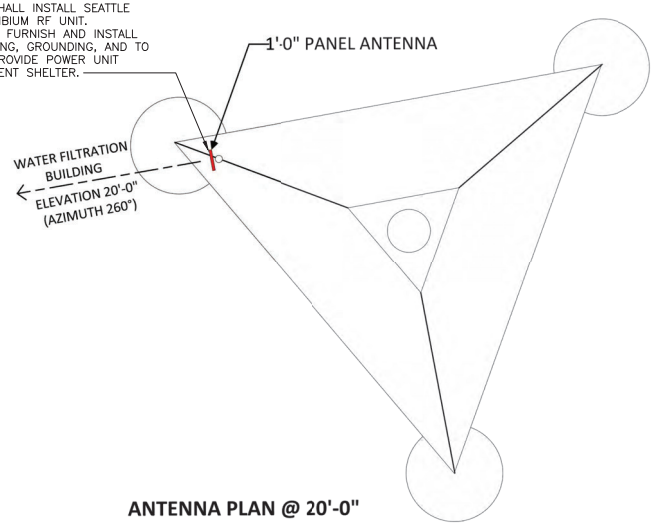

ANTENNA PLAN @ 20'-0"

100% SUBMITTAL (NOT FOR CONSTRUCTION)

VAULT SERIAL #	DATE	MARK	NATURE	MADE	CHK'D	REV'D
3583-84			REVISIONS			

C:\pw_pcl_workingdir\osbornconsulting-pw.bentley.com_osbornconsulting-pw-01\jacob romero\dms26270\T-104.dwg
jacobr May-31-22 11:56am

INSTALLATION PLAN – SWAN ANTENNA

ADCOMM Engineering LLC

APPROVED FOR ADVERTISING
LIZ ALZEER
DEPARTMENT OF FINANCE & ADMINISTRATIVE SERVICES
SEATTLE, WASHINGTON . . . . . 20 . . .
BY: . . . . . .
CITY PURCHASING & CONTRACTING SERVICES DIRECTOR

INITIALS AND DATE			INITIALS AND DATE
DESIGNED	TK	6/01/22	REVIEWED: DES. CONST. SDOT PROJ. MGR.
CHECKED	JPB	6/01/22	
DRAWN	TK	6/01/22	RECEIVED
CHECKED	JPB	6/01/22	REVISED AS BUILT

ALL WORK SHALL BE DONE IN ACCORDANCE WITH THE CITY OF SEATTLE STANDARD PLANS AND SPECIFICATIONS AND OTHER DOCUMENTS CALLED FOR IN SECTION 0-02.3 OF THE PROJECT MANUAL.

STATE OF WASHINGTON JOSEPH P. BLASCHA 17853 REGISTERED PROFESSIONAL ENGINEER

Seattle Public Utilities

ORDINANCE NO. PW NO. 2022-029

SCALE: NTS

TOLT DAM EARLY WARNING SYSTEM – OTHER PROJECT COMPONENTS

CBB PC C115120 CO
VPI # 785–45
T-104
SHEET 89 OF 134

NOTE:

1. OUTDOOR GRADE SILICONE MEETING ASTM C920, TYPE S, GRADE NS, CLASS 25 STANDARD USED TO WEATHERPROOF ENCLOSURE TO EXTERIOR WALL, AND SEAL WALL PENETRATIONS.

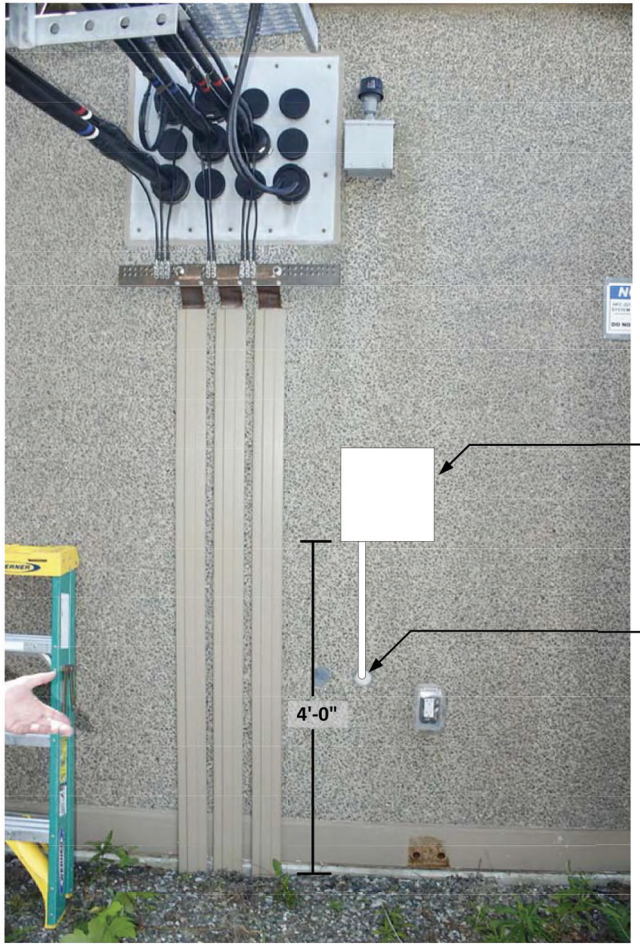

SIREN ACTIVATION CONTROL ENCLOSURE, CENTERED AT 4'-6" HEIGHT ABOVE GROUND. SEE DETAIL "A"

EXISTING WALL PENETRATION USED TO ROUTE 3/4" PVC CONDUIT INTO BUILDING

EXTERIOR WALL ELEVATION ENTRY PANEL AND ACTUATOR ENCLOSURE

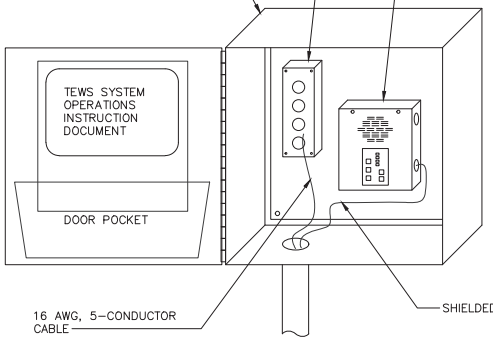

DETAIL A

100% SUBMITTAL (NOT FOR CONSTRUCTION)

INSTALLATION PLAN – SWAN EXTERIOR WALL PANEL AND ACTUATOR

ADCOMM Engineering LLC

APPROVED FOR ADVERTISING
LIZ ALZEER
DEPARTMENT OF FINANCE & ADMINISTRATIVE SERVICES
SEATTLE, WASHINGTON . . . . . 20 . . .
BY: . . . . . .
CITY PURCHASING & CONTRACTING SERVICES DIRECTOR

INITIALS AND DATE		
DESIGNED	TK	6/01/22
CHECKED	JPB	6/01/22
DRAWN	TK	6/01/22
CHECKED	JPB	6/01/22

INITIALS AND DATE	
REVIEWED:	
DES.	CONST.
SDOT	PROJ. MGR.
RECEIVED	
REVISED AS BUILT	

ALL WORK SHALL BE DONE IN ACCORDANCE WITH THE CITY OF SEATTLE STANDARD PLANS AND SPECIFICATIONS AND OTHER DOCUMENTS CALLED FOR IN SECTION 0-02.3 OF THE PROJECT MANUAL.

STATE OF WASHINGTON JOSEPH P. BLASCIA 17853 REGISTERED PROFESSIONAL ENGINEER

Seattle Public Utilities

ORDINANCE NO. PW NO. 2022-029

SCALE: NTS

TOLT DAM EARLY WARNING SYSTEM – OTHER PROJECT COMPONENTS

CBB	PC C115120 CO
VPI #	785-45
	T-105
SHEET	90 OF 134

VAULT SERIAL #	DATE	MARK	NATURE	MADE	CHK'D	REV'D
38,384			REVISIONS			

C:\pw_oci_working\jb\osborneconsulting-pw=01\jacob romero\dms26270\T-105.dwg
jacobr May-31-22 11:56am

GENERAL NOTES

1. ORIGINAL BASE DRAWING IS BASED ON A PDF COPY OF THE ORIGINAL LINE DRAWINGS. THE ORIGINAL DRAWINGS WERE NOT AVAILABLE TO THE PROJECT TEAM.
2. ALL ITEMS ON THIS DRAWING ARE EXISTING.

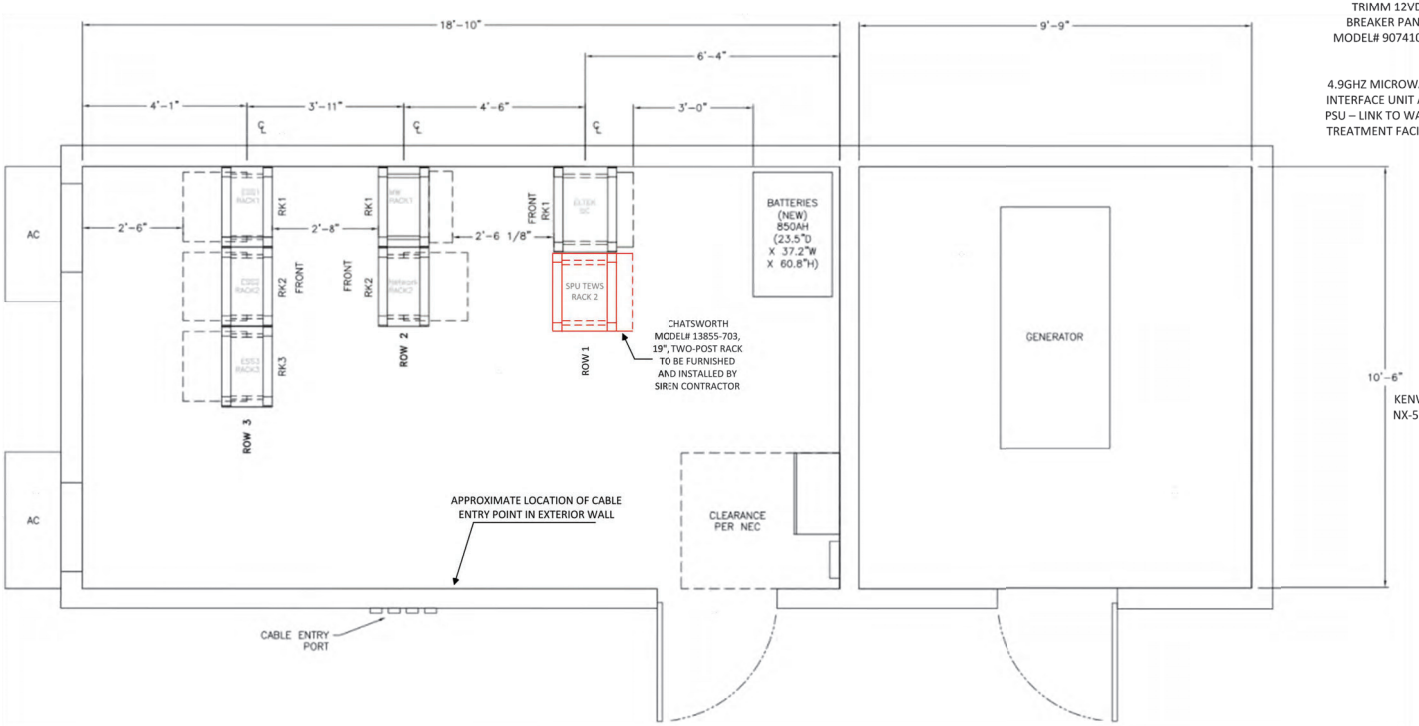

EQUIPMENT ROOM LAYOUT INSTALLATION PLAN

NTS

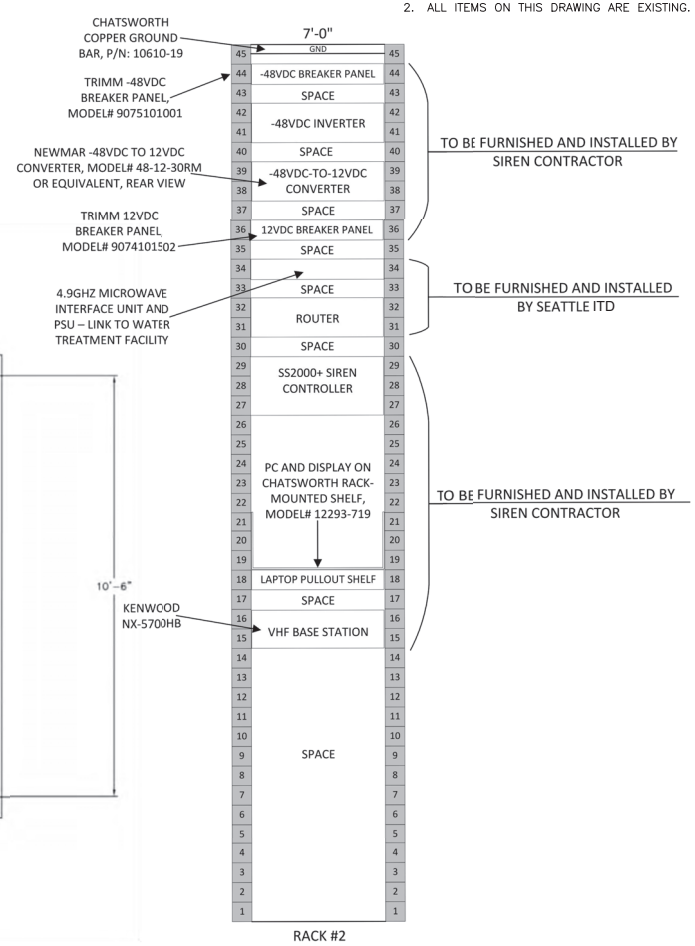

RACK ELEVATION ROW #3, RACK #2 INSTALLATION PLAN

NTS

100% SUBMITTAL (NOT FOR CONSTRUCTION)

INSTALLATION PLAN – SWAN EQUIPMENT ROOM

VAULT SERIAL #	DATE	MARK	NATURE REVISIONS	MADE	CHK'D	REV'D
35384						

ADCOMM Engineering LLC

APPROVED FOR ADVERTISING
LIZ ALZEER
DEPARTMENT OF FINANCE & ADMINISTRATIVE SERVICES
SEATTLE, WASHINGTON . . . . . 20 . . .
BY: . . . . . .
CITY PURCHASING & CONTRACTING SERVICES DIRECTOR

INITIALS AND DATE		
DESIGNED	TK	6/01/22
CHECKED	JPB	6/01/22
DRAWN	TK	6/01/22
CHECKED	JPB	6/01/22

INITIALS AND DATE	
REVIEWED:	
DES.	CONST.
SDOT	PROJ. MGR.
RECEIVED	
REVISED AS BUILT	

ALL WORK SHALL BE DONE IN ACCORDANCE WITH THE CITY OF SEATTLE STANDARD PLANS AND SPECIFICATIONS AND OTHER DOCUMENTS CALLED FOR IN SECTION 0-02.3 OF THE PROJECT MANUAL.

STATE OF WASHINGTON JOSEPH P. BLASCHA 17853 REGISTERED PROFESSIONAL ENGINEER

Seattle Public Utilities

ORDINANCE NO. PW NO. 2022-029

SCALE: NTS

TOLT DAM EARLY WARNING SYSTEM – OTHER PROJECT COMPONENTS

CAD	PC C115120
	CO
VPI #	785-45
	T-106
SHEET	91 OF 134

C:\pw_pol_working\osborncontsulting-pw.bentley.com_osborncontsulting-pw-01\jacob romero\dms26270\T-106.dwg
jacobr May-31-22 11:57am

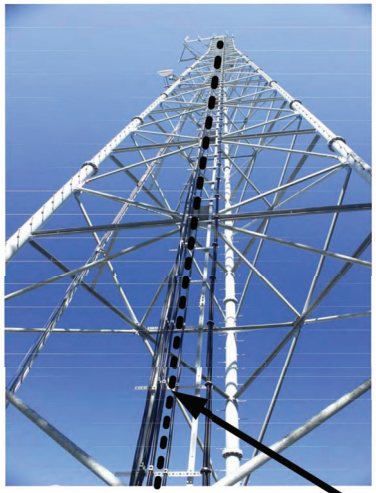

TOWER EAST-FACE VIEW

7/8" VHF COAXIAL CABLE SUPPORTED WITH SITEPRO1 SR78-K CUSHION HANGERS OR EQUIVALENT AT 36" MAXIMUM SPACING ON TOWER CABLE LADDER

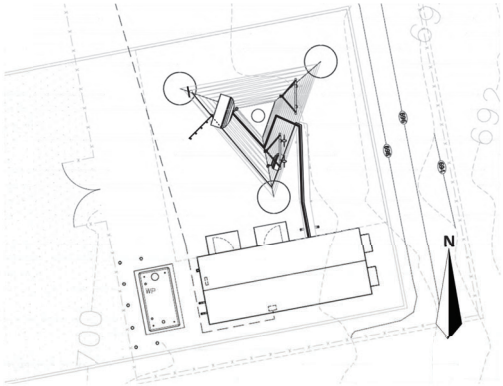

OUTDOOR CABLE ROUTING PLAN VIEW

7/8" COAXIAL CABLE PATH – USE SITEPRO1 SR78-K CUSHION HANGERS AND ADAP-O ANGLE ADAPTERS WITH 36" MAXIMUM SPACING FOR HORIZONTAL RUN AT TOP

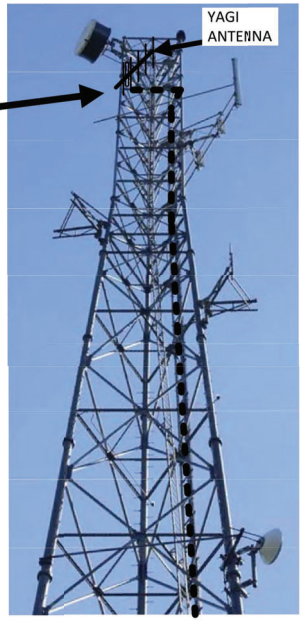

UPPER TOWER SOUTHWEST-FACE VIEW

0.36" CAT5E CABLE SUPPORTED ON SITEPRO1 ADP238-U ADJUSTABLE PIPE ANTENNA MOUNT USING SITEPRO SR38-K CUSHION HANGERS AND STK2 STANDOFF KITS OR EQUIVALENT

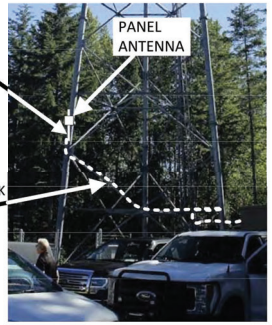

0.36" CAT5E CABLE SUPPORTED ON DIAGONAL BRACE USING SITEPRO1 SR38-K CUSHION HANGERS AND STK3 STANDOFF KITS OR EQUIVALENT AT 36" MAXIMUM SPACING

LOWER TOWER SOUTHWEST-FACE VIEW

0.36" CAT5E CABLE SUPPORTED WITH SITEPRO1 SR38-K CUSHION HANGERS AND ADAP-O ANGLE ADAPTERS OR EQUIVALENT AT 36" MAXIMUM SPACING ON TOWER HORIZONTAL CROSS-MEMBER

CONNECT TWO GROUNDING KITS TO TOWER GROUND BAR

0.36" CAT5E CABLE AND 7/8" VHF COAXIAL CABLE SUPPORTED WITH SITEPRO1 CIN3878 BARREL CUSHIONS AND SR782-K CUSHION HANGERS OR EQUIVALENT AT 36" MAXIMUM SPACING ON ICE BRIDGE

TOWER EAST-FACE VIEW, ICE BRIDGE INTERFACE

TOWER AND ICE BRIDGE RF AND SIGNAL CABLE ROUTING DETAILS

NTS

100% SUBMITTAL (NOT FOR CONSTRUCTION)

INSTALLATION PLAN – SWAN TOWER CABLE ROUTING

VAULT SERIAL #	DATE	MARK	NATURE REVISIONS	MADE	CHK'D	REV'D
38384						

ADCOMM Engineering LLC

APPROVED FOR ADVERTISING
LIZ ALZEER
DEPARTMENT OF FINANCE & ADMINISTRATIVE SERVICES
SEATTLE, WASHINGTON . . . . . 20 . . .
BY: . . . . . .
CITY PURCHASING & CONTRACTING SERVICES DIRECTOR

INITIALS AND DATE			INITIALS AND DATE	
DESIGNED	TK	6/01/22	REVIEWED: DES.	CONST.
CHECKED	JPB	6/01/22	SDOT	PROJ. MGR.
DRAWN	TK	6/01/22	RECEIVED	
CHECKED	JPB	6/01/22	REVISED AS BUILT	

ALL WORK SHALL BE DONE IN ACCORDANCE WITH THE CITY OF SEATTLE STANDARD PLANS AND SPECIFICATIONS AND OTHER DOCUMENTS CALLED FOR IN SECTION 0-02.3 OF THE PROJECT MANUAL.

JOSEPH P. BLASCHKA, STATE OF WASHINGTON, 17853, REGISTERED PROFESSIONAL ENGINEER

Seattle Public Utilities

ORDINANCE NO. PW NO. 2022-029

SCALE: NTS

TOLT DAM EARLY WARNING SYSTEM – OTHER PROJECT COMPONENTS

USB	PC C115120
	CO
VPI #	785-45
	T-107
SHEET	92 OF 134

C:\pw_oci_working\{\osborneconsulting-pw.bentley.com_osborneconsulting-pw-01\jacob ramera\dms26270\T-107.dwg
jacobr May-31-22 12:36pm

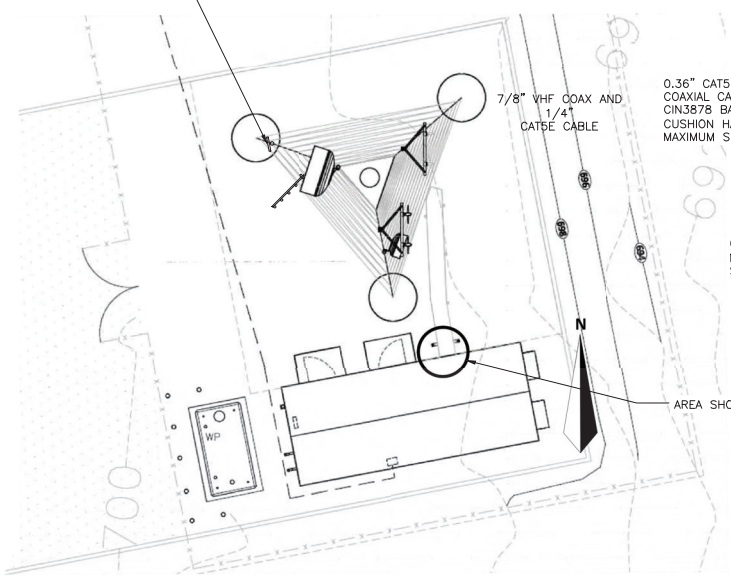

0.36" CAT5E CABLE AND 7/8" VHF COAXIAL CABLE SUPPORTED WITH SITEPRO1 CIN3878 BARREL CUSHIONS AND SR782-K CUSHION HANGERS OR EQUIVALENT AT 36" MAXIMUM SPACING ON ICE BRIDGE

CABLE SUPPORT HARDWARE MOUNTED AT 36" MAXIMUM SPACING ON ICE BRIDGE

ROUTE 0.36" CAT5E AND 7/8" COAX CABLE THROUGH WAVEGUIDE PANEL PORT USING APPROPRIATELY-SIZED BOOT AND CUSHION INSERT

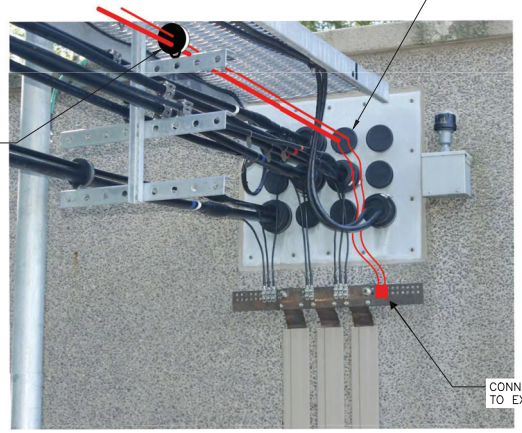

CONNECT TWO TRANSMISSION LINE GROUND KITS TO EXTERIOR BUILDING GROUND BAR

DETAIL A – WAVEGUIDE ENTRY PANEL ON BUILDING NORTH WALL

COMMUNICATIONS BUILDING EXTERIOR RF AND SIGNAL CABLE ROUTING DETAILS

NTS

100% SUBMITTAL (NOT FOR CONSTRUCTION)

INSTALLATION PLAN – SWAN BUILDING EXTERIOR CABLE ROUTING

VAULT SERIAL #	DATE	MARK	NATURE	MADE	CHK'D	REV'D
38,384			REVISIONS			

C:\pw_pci_working\ft\osbornconsulting-pw.bentley.com_osbornconsulting-pw-01\jacob romero\dms26270\T-108.dwg
jacobr May-31-22 12:57pm

ADCOMM Engineering LLC

APPROVED FOR ADVERTISING
LIZ ALZEER
DEPARTMENT OF FINANCE & ADMINISTRATIVE SERVICES
SEATTLE, WASHINGTON . . . . . 20 . . .
BY: . . . . . .
CITY PURCHASING & CONTRACTING SERVICES DIRECTOR

INITIALS AND DATE		
DESIGNED	TK	6/01/22
CHECKED	JPB	6/01/22
DRAWN	TK	6/01/22
CHECKED	JPB	6/01/22

INITIALS AND DATE	
REVIEWED:	
DES.	CONST.
SDOT	PROJ. MGR.
RECEIVED	
REVISED AS BUILT	

ALL WORK SHALL BE DONE IN ACCORDANCE WITH THE CITY OF SEATTLE STANDARD PLANS AND SPECIFICATIONS AND OTHER DOCUMENTS CALLED FOR IN SECTION 0-02.3 OF THE PROJECT MANUAL.

JOSEPH P. BLASCHKA, STATE OF WASHINGTON, 17853, REGISTERED PROFESSIONAL ENGINEER

Seattle Public Utilities

ORDINANCE NO. PW NO. 2022-029

SCALE: NTS

TOLT DAM EARLY WARNING SYSTEM – OTHER PROJECT COMPONENTS

T08 | PC CO C115120 | VPI # 785-45 | T-108 | SHEET 93 OF 134

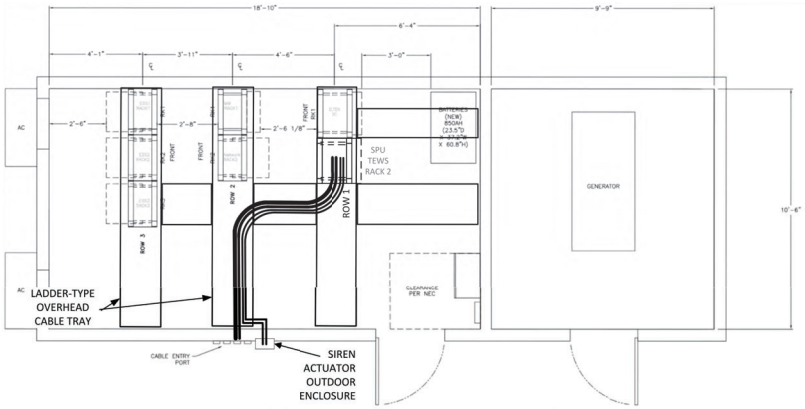

COMMUNICATIONS BUILDING CABLE ROUTING PLAN VIEW

NOTES:

1) OUTDOOR GRADE SILICONE SEALANT MEETING ASTM C920, TYPE S, GRADE NS, CLASS 25 STANDARD USED TO SEAL WALL PENETRATION
2) ALL CABLES TO BE TRAY RATED

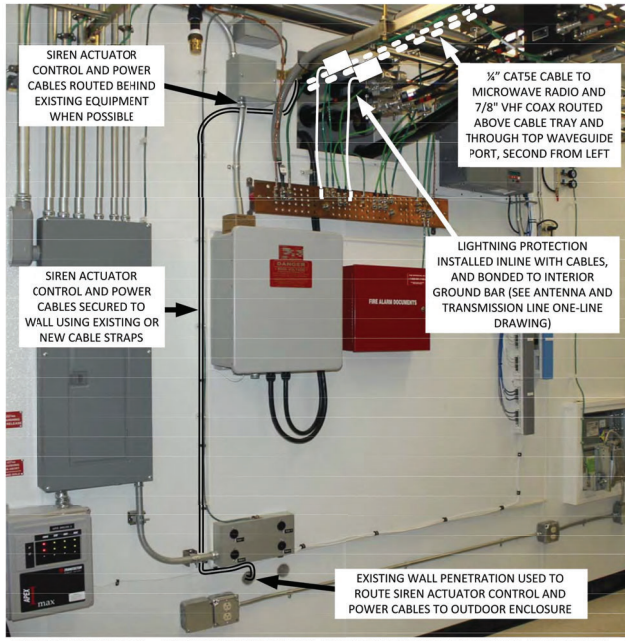

INTERIOR NORTH WALL – WAVEGUIDE ENTRY PANEL ANDSIREN ACTUATOR CABLE WALL PENETRATION

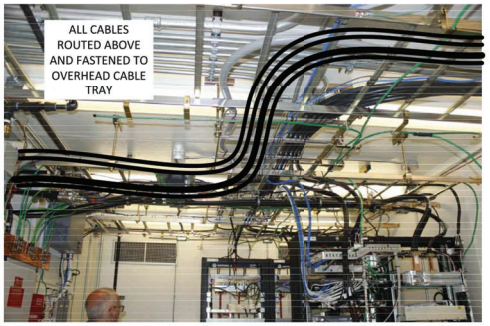

VIEW OF CABLE TRAY FACING EAST – CABLE PATH FROM NORTH WALL TO RACK 2, ROW 1

CABLE PATH TO NORTH WALL AND RACK 2, ROW 1 POSITION OUTLINED

COMMUNICATIONS BUILDING INTERIOR RF AND SIGNAL CABLE ROUTING DETAILS

100% SUBMITTAL (NOT FOR CONSTRUCTION)

INSTALLATION PLAN – SWAN BUILDING INTERIOR CABLE ROUTING

VAULT SERIAL #	DATE	MARK	NATURE	MADE	CHK'D	REV'D
38384			REVISIONS			

ADCOMM Engineering LLC

APPROVED FOR ADVERTISING
LIZ ALZEER
DEPARTMENT OF FINANCE & ADMINISTRATIVE SERVICES
SEATTLE, WASHINGTON . . . . . 20 . . .
BY: . . . . . .
CITY PURCHASING & CONTRACTING SERVICES DIRECTOR

INITIALS AND DATE			INITIALS AND DATE	
DESIGNED	TK	6/01/22	REVIEWED: DES.	CONST.
CHECKED	JPB	6/01/22	SDOT	PROJ. MGR.
DRAWN	TK	6/01/22	RECEIVED	
CHECKED	JPB	6/01/22	REVISED AS BUILT	

ALL WORK SHALL BE DONE IN ACCORDANCE WITH THE CITY OF SEATTLE STANDARD PLANS AND SPECIFICATIONS AND OTHER DOCUMENTS CALLED FOR IN SECTION 0-02.3 OF THE PROJECT MANUAL.

JOSEPH P. BLASCHKA, STATE OF WASHINGTON, 17853, REGISTERED PROFESSIONAL ENGINEER

Seattle Public Utilities

ORDINANCE NO. PW NO. 2022-029

SCALE: NTS

TOLT DAM EARLY WARNING SYSTEM – OTHER PROJECT COMPONENTS

CBB	PC C115120
	CO
VPI #	785-45
	T-109
SHEET	94 OF 134

C:\pw_pol_working\osborncontsulting-pw.bentley.com_osborncontsulting-pw-01\jacob romero\dms26270\T-109.dwg
jacobr May-31-22 11:57am

GENERAL NOTES:

1. THE VISTA HOUSE IS LOCATED AT THE TOLT DAM. THE SITE COORDINATES ARE 47–41–.4 N121–41–24.4 W.
2. THE CONTROLLER SHALL BE CONNECTED TO THE SPU DATA NETWORK LOCATED AT THE VISTA HOUSE.
3. THE CONTROLLER SHALL INCLUDE THE MANUAL PUSH BUTTON ACTUATION AS PROVIDED FOR THE WOCC AND THE NOC.
4. THE CONTROLLER SHALL BE RACK MOUNTED ON CONTRACTOR SUPPLIED RACK MOUNTING SHELVES IN THE SPU PROVIDED EQUIPMENT RACK ASSEMBLY.

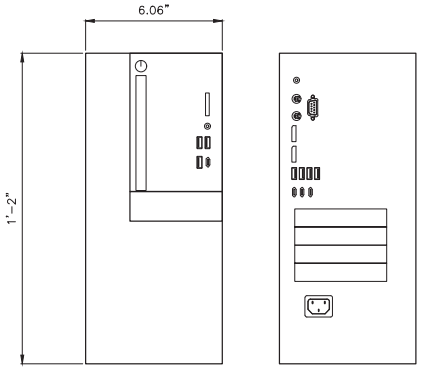

FRONT VIEW REAR VIEW

DELL OPTIPLEX XE3 TOWER XCTO PC

OPERATING SYSTEM	WINDOWS 10 PROFESSIONAL 64
MEMORY	16GB 2X8GB 2666MHz DDR4
HARD DRIVE	500GB 7200rpm SATA
PROCESSOR	INTEL CORE i5–8500 (6 CORES/9MB/6T/UP TO 4.1GHz/65W)
DISK DRIVE	8x DVD–ROM 9.5mm OPTICAL
PORTS	1x SD 3 CARD READER (OPTIONAL) 1x HEADSET CONNECTOR 2x USB 3.1 GEN 1
WIRED KEYBOARD	INCLUDED
WIRED MOUSE	INCLUDED
WEIGHT	17.49 lbs

UNITS: INCHES

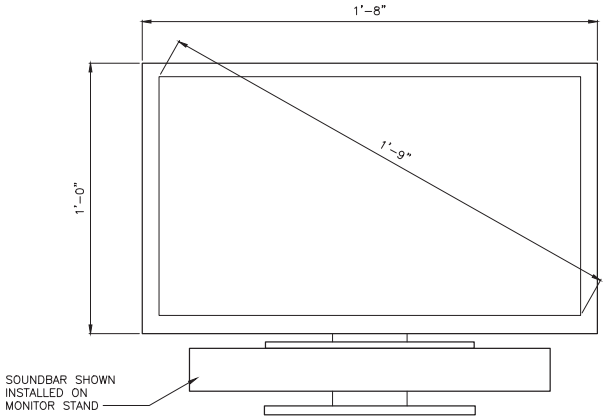

DELL E2220H 21.5" LED MONITOR

TYPE	LED–BACKLIT LCD MONITOR
ASPECT RATIO	16:9
RESOLUTION	1920 x 1080
RESPONSE TIME	5ms GRAY–TO–GRAY
INPUT CONNECTOR	1x DISPLAYPORT 1.2 1x VGA
WEIGHT	10.8 lbs
POWER CONSUMPTION	13W OPERATIONAL 0.3W STANDBY

DELL AC511M STEREO USB SOUNDBAR

AMPLIFICATION TYPE	ACTIVE
NOMINAL OUTPUT POWER	2.5W
FREQUENCY RESPONSE	100Hz – 20kHz
CONNECTOR TYPES	3.5mm HEADPHONES USB 2.0 3.5mm AUDIO LINE IN (STEREO)
POWER SOURCE	USB
WEIGHT	16.01 oz

X–PCD1 DESKMOUNT PC W/MONITOR

NTS

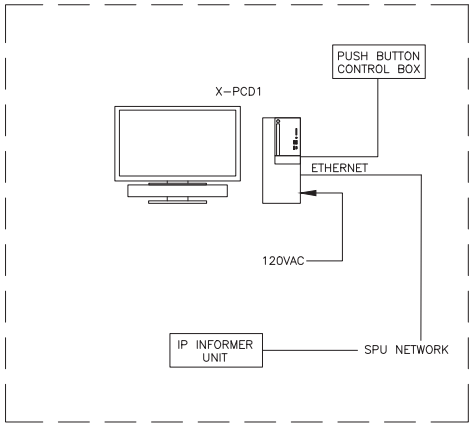

VISTA HOUSE

100% SUBMITTAL (NOT FOR CONSTRUCTION)

INSTALLATION PLAN – VISTA HOUSE

ADCOMM Engineering LLC

APPROVED FOR ADVERTISING
LIZ ALZEER
DEPARTMENT OF FINANCE & ADMINISTRATIVE SERVICES
SEATTLE, WASHINGTON . . . . . 20 . . .
BY: . . . . . .
CITY PURCHASING & CONTRACTING SERVICES DIRECTOR

INITIALS AND DATE		
DESIGNED	TK	6/01/22
CHECKED	JPB	6/01/22
DRAWN	TK	6/01/22
CHECKED	JPB	6/01/22

INITIALS AND DATE	
REVIEWED:	
DES.	CONST.
SDOT	PROJ. MGR.
RECEIVED	
REVISED AS BUILT	

ALL WORK SHALL BE DONE IN ACCORDANCE WITH THE CITY OF SEATTLE STANDARD PLANS AND SPECIFICATIONS AND OTHER DOCUMENTS CALLED FOR IN SECTION 0–02.3 OF THE PROJECT MANUAL.

STATE OF WASHINGTON JOSEPH P. BLASCHKA 17853 REGISTERED PROFESSIONAL ENGINEER

Seattle Public Utilities

ORDINANCE NO. PW NO. 2022–029

SCALE: NTS

TOLT DAM EARLY WARNING SYSTEM – OTHER PROJECT COMPONENTS

JOB PC CO C115120

VPI # 785–45

T-110

SHEET 95 OF 134

VAULT SERIAL #	DATE	MARK	NATURE REVISIONS	MADE	CHK'D	REV'D
58384						

C:\pw_pol_working\osborncons\osborncons\ulting-pw.bentley.com_osborncons\ulting-pw-01\jacob romero\dms26270\T-110.dwg
jacobr May-31-22 11:57am

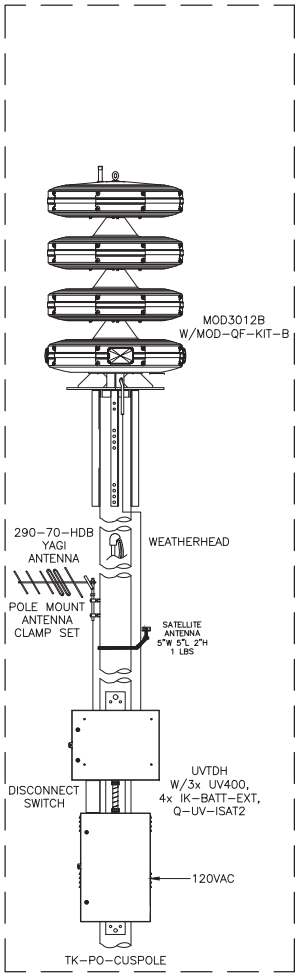

RTU SITE 7
(TRUE NORTH 270 DEGREES)
OWS 5 VISTA HOUSE –
BALLASTED BASE POLE

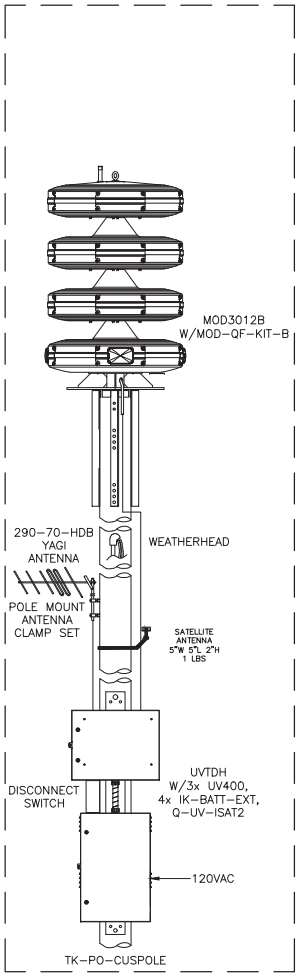

RTU SITE #8
(TRUE NORTH 70 DEGREES)
OWS 9 NE 60TH

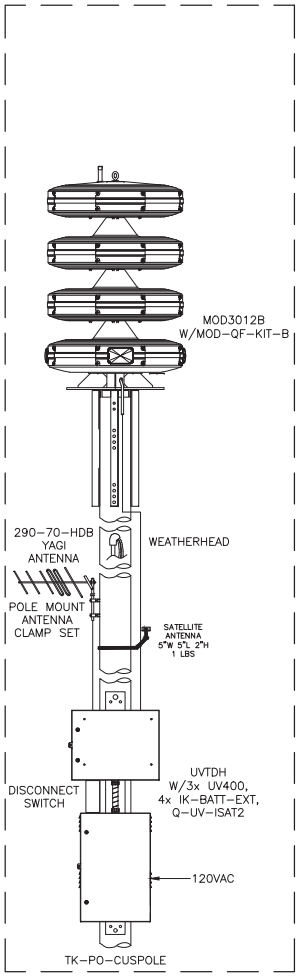

RTU SITE # 9
(TRUE NORTH 65 DEGREES)
OWS 10 TOLT MACDONALD PARK

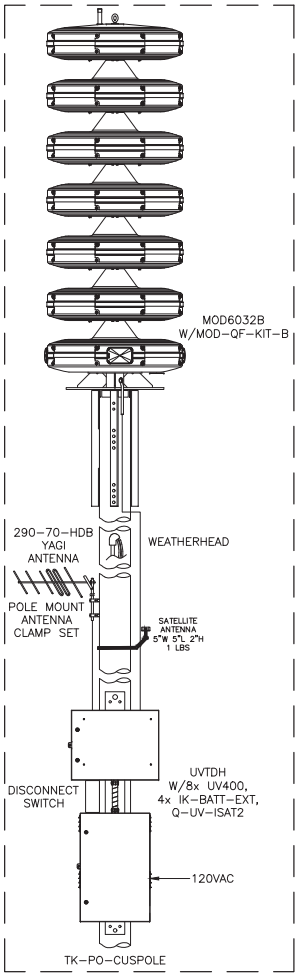

RTU SITE #6
(TRUE NORTH 95 DEGREES)
OWS 6 REGULATING BASIN

100% SUBMITTAL (NOT FOR CONSTRUCTION)

OWS SYSTEM DETAILS – 1

VAULT SERIAL #	DATE	MARK	NATURE REVISIONS	MADE	CHK'D	REV'D
38384						

ADCOMM Engineering LLC

APPROVED FOR ADVERTISING
LIZ ALZEER
DEPARTMENT OF FINANCE & ADMINISTRATIVE SERVICES
SEATTLE, WASHINGTON . . . . . 20 . . .
BY: . . . . . .
CITY PURCHASING & CONTRACTING SERVICES DIRECTOR

INITIALS AND DATE		
DESIGNED	NJ	6/01/22
CHECKED	JPB	6/01/22
DRAWN	NJ	6/01/22
CHECKED	JPB	6/01/22

INITIALS AND DATE
REVIEWED: DES. CONST. SDOT PROJ. MGR.
RECEIVED
REVISED AS BUILT

ALL WORK SHALL BE DONE IN ACCORDANCE WITH THE CITY OF SEATTLE STANDARD PLANS AND SPECIFICATIONS AND OTHER DOCUMENTS CALLED FOR IN SECTION 0-02.3 OF THE PROJECT MANUAL.

STATE OF WASHINGTON JAMES P. BLASCHKA 17853 REGISTERED PROFESSIONAL ENGINEER

Seattle Public Utilities

ORDINANCE NO. PW NO. 2022-029

SCALE: NTS

TOLT DAM EARLY WARNING SYSTEM – OTHER PROJECT COMPONENTS

JOB	PC CO	C115120
VPI #		785-45
		T-203
SHEET		98 OF 134

C:\pw_pci_working\jbc\osborneconsulting-pw-bentley.com_osborneconsulting-pw-01\jacob romero\dms26270\T-203.dwg
jacobr May-31-22 11:57am

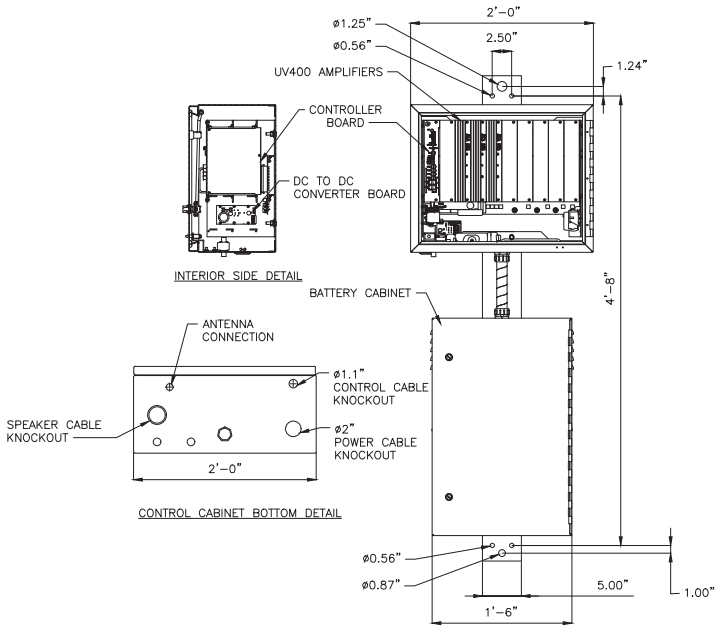

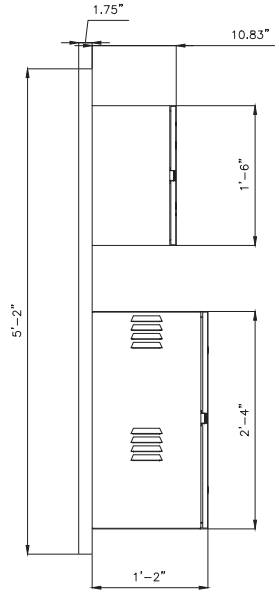

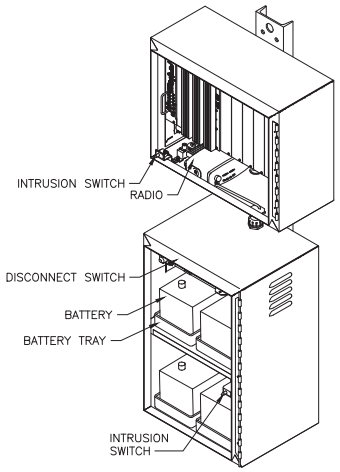

SPECIFICATIONS

POWER

INPUT VOLTAGE:	120V±10% 50 / 60 HZ SINGLE-PHASE
INPUT CURRENT:	4 A MAX.
BATTERY INPUT VOLTAGE:	24 VOLTS (NOM.)
OPERATING VOLTAGE:	24VDC
STANDBY TIME:	> 7 DAYS
CONTINUOUS TIME:	30 MIN.

CONTROL MODULE

SIGNAL DURATION (AUTO RESET):	3 MIN. MAX

MICROPHONE

INPUT IMPEDANCE:	10K OHMS
AUDIO DISTORTION:	1% THD MAX.
MAXIMUM LOAD:	600 OHMS
CONTACT CLOSURE:	(MIN) 500MS<2K OHMS

AMPLIFIER MODULE
CONTROL HOUSING CAN HAVE UP TO EIGHT 400W AMPLIFIERS

FREQUENCY RESPONSE:	(300 TO 3 KHZ)	±3DB (REF. 1KHZ)
OUTPUT VOLTAGE (TONE AND PA):	(TO SPEAKER DRIVERS) 70 VRM (NOM.)	
INPUT IMPEDANCE:	(PER AMPLIFIER)	100K OHMS

GENERAL

OPERATING TEMPERATURE**:	-22°F TO 149°F
ENCLOSURES:	ALUMINUM
CONTROL CABINET:	TYPE 4 OR 4X
BATTERY CABINET:	TYPE 4 (VENTED, LOUVERS TO BE SCREENED TO PREVENT INSECT INSTRUSION)

**THE SIREN CAN OPERATE THROUGHOUT THIS TEMPERATURE RANGE PROVIDED THE BATTERY TEMPERATURE IS MAINTAINED AT 0°F OR HIGHER.

BATTERIES

QTY. 4, 12 VOLT HD COMMERCIAL BATTERIES:

MAINTENANCE FREE
LEAD-ACID
DEEP-CYCLE
RECHARGEABLE

WEIGHTS (APPROX)

UV400 EACH 4.12 LBS.

CABINETS W/BATTERIES 170 LBS.

TOTAL WEIGHT: 202.96 LBS.

UVTD DIGITAL SIREN CONTROLLER DIAGRAM FOR OWS SITES #5, 9, 10

NTS

100% SUBMITTAL (NOT FOR CONSTRUCTION)

OWS SYSTEM DETAILS – 2

ADCOMM Engineering LLC

APPROVED FOR ADVERTISING
LIZ ALZEER
DEPARTMENT OF FINANCE & ADMINISTRATIVE SERVICES
SEATTLE, WASHINGTON . . . . . 20 . . .
BY: . . . . . .
CITY PURCHASING & CONTRACTING SERVICES DIRECTOR

INITIALS AND DATE			INITIALS AND DATE
DESIGNED	NJ	6/01/22	REVIEWED: DES. CONST. SDOT PROJ. MGR.
CHECKED	JPB	6/01/22	
DRAWN	NJ	6/01/22	RECEIVED
CHECKED	JPB	6/01/22	REVISED AS BUILT

ALL WORK SHALL BE DONE IN ACCORDANCE WITH THE CITY OF SEATTLE STANDARD PLANS AND SPECIFICATIONS AND OTHER DOCUMENTS CALLED FOR IN SECTION 0-02.3 OF THE PROJECT MANUAL.

STATE OF WASHINGTON JOSEPH P. BLASCHKA 17853 REGISTERED PROFESSIONAL ENGINEER

Seattle Public Utilities

ORDINANCE NO. PW NO. 2022-029

SCALE: NTS

TOLT DAM EARLY WARNING SYSTEM – OTHER PROJECT COMPONENTS

CBB PC CO	C115120
VPI #	785-45
	T-204
SHEET	99 OF 134

VAULT SERIAL #	DATE	MARK	NATURE REVISIONS	MADE	CHK'D	REV'D
58,584						

C:\pw_pci_workingdir\osborneconsulting-pw.bentley.com_osborneconsulting-pw-01\jacob romero\dms26270\T-204.dwg
jacobr May-31-22 11:58am

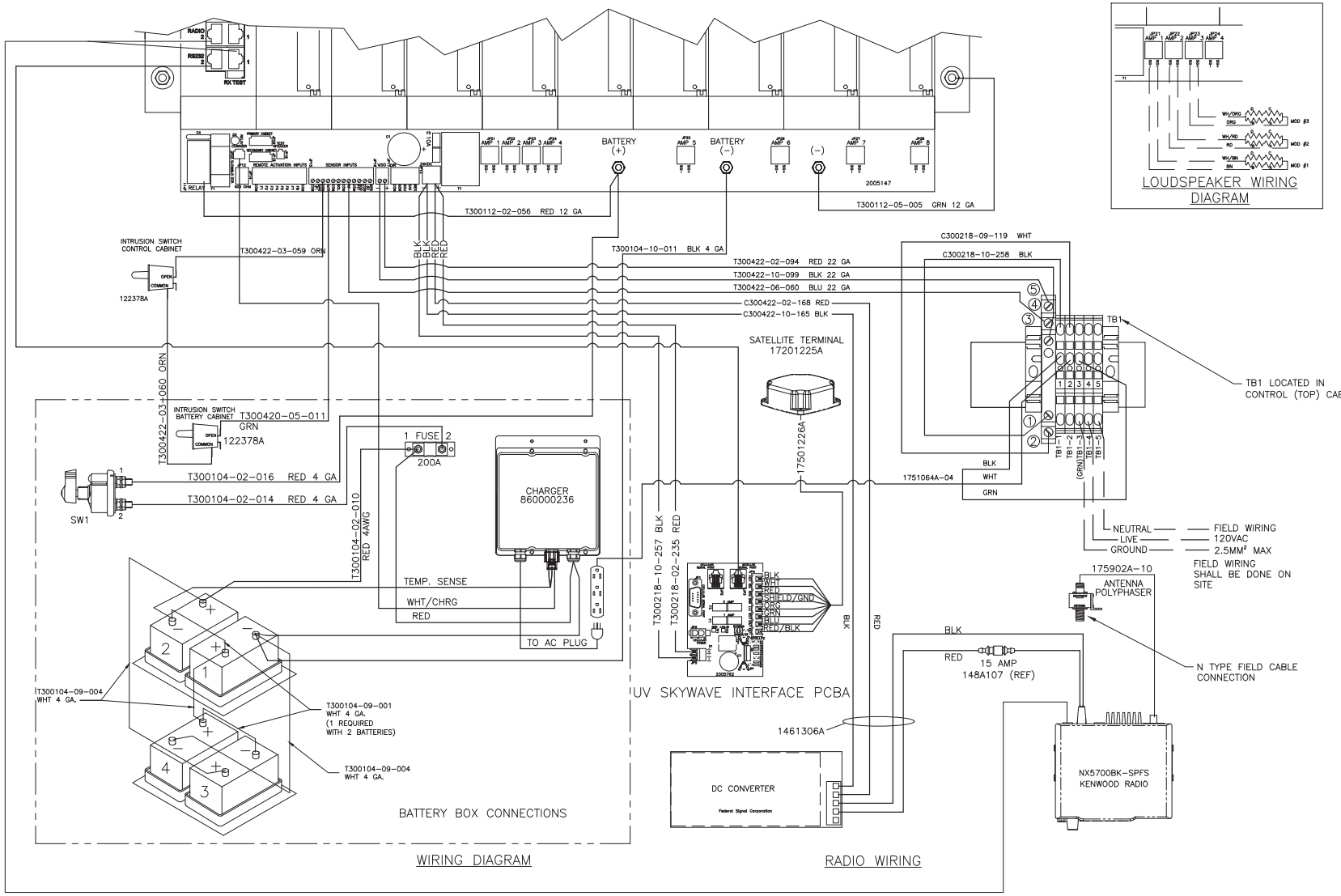

100% SUBMITTAL (NOT FOR CONSTRUCTION)

UVTD DIGITAL SIREN CONTROLLER DIAGRAM FOR OWS SITES #5, 9, 10

NTS

OWS SYSTEM DETAILS – 3

VAULT SERIAL #	DATE	MARK	NATURE REVISIONS	MADE BY	CHK'D	REV'D
38384						

ADCOMM Engineering LLC

APPROVED FOR ADVERTISING
LIZ ALZEER
DEPARTMENT OF FINANCE & ADMINISTRATIVE SERVICES
SEATTLE, WASHINGTON . . . . . 20 . . .
BY: . . . . . .
CITY PURCHASING & CONTRACTING SERVICES DIRECTOR

INITIALS AND DATE		
DESIGNED	TK	6/01/22
CHECKED	JPB	6/01/22
DRAWN	TK	6/01/22
CHECKED	JPB	6/01/22

INITIALS AND DATE
REVIEWED:
DES. CONST.
SDOT PROJ. MGR.
RECEIVED
REVISED AS BUILT
ALL WORK SHALL BE DONE IN ACCORDANCE WITH THE CITY OF SEATTLE STANDARD PLANS AND SPECIFICATIONS AND OTHER DOCUMENTS CALLED FOR IN SECTION 0-02.3 OF THE PROJECT MANUAL.

STATE OF WASHINGTON — JAMES P. BLASCHKA — 17853 — REGISTERED PROFESSIONAL ENGINEER

Seattle Public Utilities
ORDINANCE NO. PW NO. 2022-029
SCALE: NTS

TOLT DAM EARLY WARNING SYSTEM – OTHER PROJECT COMPONENTS

CDB	PC C115120
	CO
VPI #	785-45
	T-205
SHEET	100 OF 134

C:\pw_ocs_working\b\osborncons\ulting-pw.bentley.com_osborncons\ulting-pw-01\jacob romero\dms26270\1-205.dwg
jacobr May-31-22 11:58am

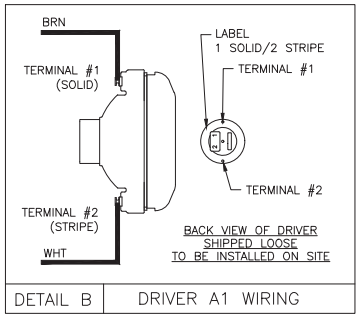

DETAIL B | DRIVER A1 WIRING

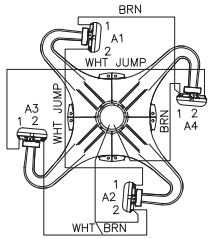

DRIVER ORIENTATION
ACTIVE MODULE 1

ACTIVE MODULE	SPEAKER CABLE	DRIVER – TERMINAL	JUMPER WIRE	DRIVER – TERMINAL	LIGHT
	PNK	---	---	---	BOTTOM MOUNT +
	BLK	---	---	---	BOTTOM MOUNT –
1	---	A1 – 2	WHT	A2 – 1	---
	WHT/BRN	A2 – 2	WHT/BRN	A3 – 2	---
	---	A3 – 1	WHT	A4 – 2	---
	BRN	A4 – 1	BRN	A1 – 1	---
2	---	B1 – 2	WHT	B2 – 1	---
	WHT/RED	B2 – 2	WHT/RED	B3 – 2	---
	---	B3 – 1	WHT	B4 – 2	---
	RED	B4 – 1	RED	B1 – 1	---
3	---	C1 – 2	WHT	C2 – 1	---
	WHT/ORG	C2 – 2	WHT/ORG	C3 – 2	---
	---	C3 – 1	WHT	C4 – 2	---
	ORG	C4 – 1	ORG	C1 – 1	---
	RED/WHT	---	---	---	TOP MOUNT +
	RED/BLK	---	---	---	TOP MOUNT –

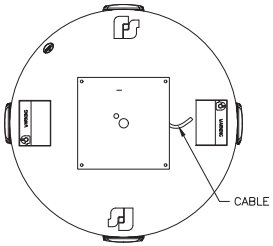

BOTTOM VIEW

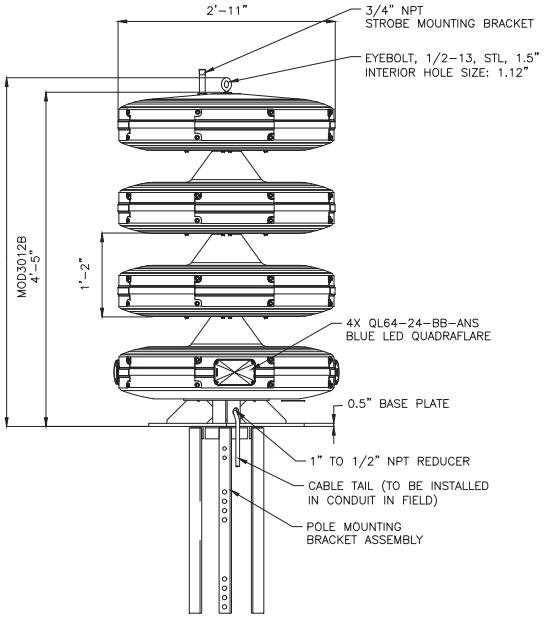

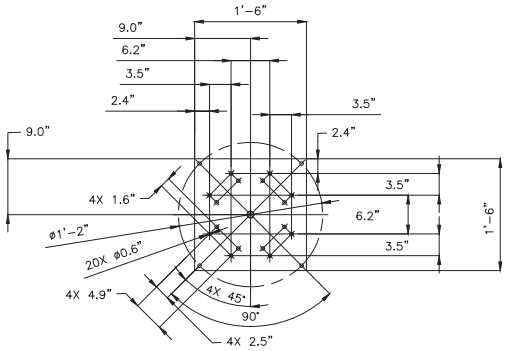

BASE PLATE

SPECIFICATIONS

1200 WATTS
115 dBC @ 100'
EFFECTIVE RANGE @ 70 dBc: 2,200'
WEIGHT: 255 lbs
HEIGHT: 57.0
PAINTED POWDER COAT OFF–WHITE
FREQUENCY RESPONSE 200–2kHz
40' MIN. CABLE TAIL FACTORY INSTALLED

CABLE SPECIFICATIONS

CONDUCTOR SIZE: 14 AWG
NUMBER OF CONDUCTORS: 10 COND.
CONDUCTOR MATERIAL: PVC, 105°C
CABLE O.D.: 25.4 [1.00] ±10% (NOM)
RESISTANCE: 2.7 OHM PER 1000'
VINYL INSULATION THICKNESS: 0.016"
JACKET COLOR: GREY

MOD3012B OMNI–DIRECTIONAL SIREN G.A.

NTS

100% SUBMITTAL (NOT FOR CONSTRUCTION)

OWS SYSTEM DETAILS – 4

VAULT SERIAL #	DATE	MARK	NATURE REVISIONS	MADE BY	CHK'D	REV'D
38384						

C:\pw_pcl_working\8\osborneconsulting-pw-01\jacob romero\dms26270\1-206.dwg
jacobr May-31-22 11:58am

ADCOMM Engineering LLC

APPROVED FOR ADVERTISING
LIZ ALZEER
DEPARTMENT OF FINANCE & ADMINISTRATIVE SERVICES
SEATTLE, WASHINGTON . . . . . 20 . . .
BY: . . . . . .
CITY PURCHASING & CONTRACTING SERVICES DIRECTOR

INITIALS AND DATE		
DESIGNED	TK	6/01/22
CHECKED	JPB	6/01/22
DRAWN	TK	6/01/22
CHECKED	JPB	6/01/22

INITIALS AND DATE
REVIEWED:
DES. CONST.
SDOT PROJ. MGR.
RECEIVED
REVISED AS BUILT

ALL WORK SHALL BE DONE IN ACCORDANCE WITH THE CITY OF SEATTLE STANDARD PLANS AND SPECIFICATIONS AND OTHER DOCUMENTS CALLED FOR IN SECTION 0-02.3 OF THE PROJECT MANUAL.

Seattle Public Utilities
ORDINANCE NO. PW NO. 2022-029
SCALE: NTS

TOLT DAM EARLY WARNING SYSTEM – OTHER PROJECT COMPONENTS

CBB	PC C115120 CO
VPI #	785-45
	T-206
SHEET	101 OF 134

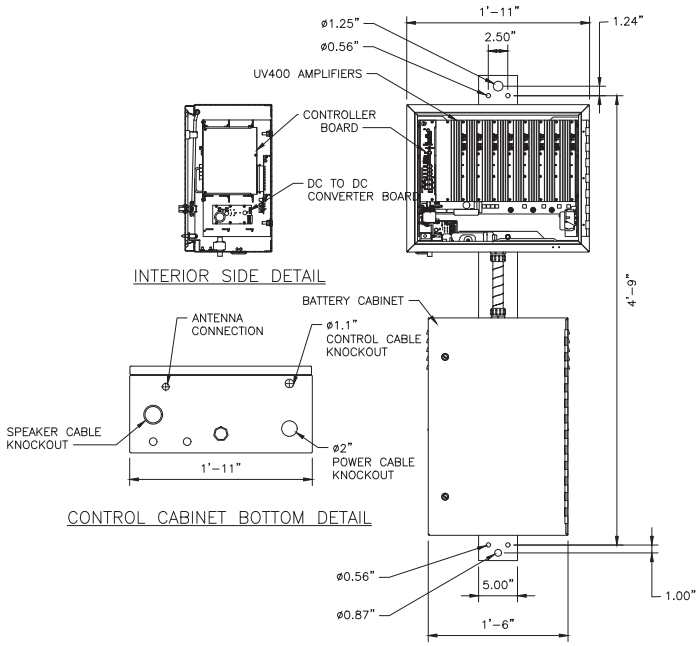

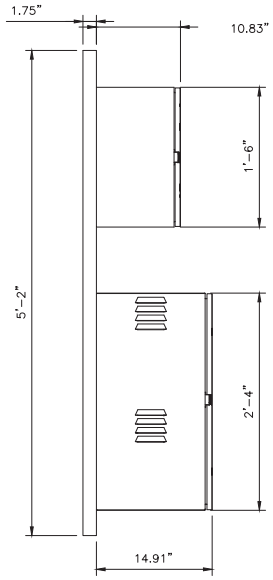

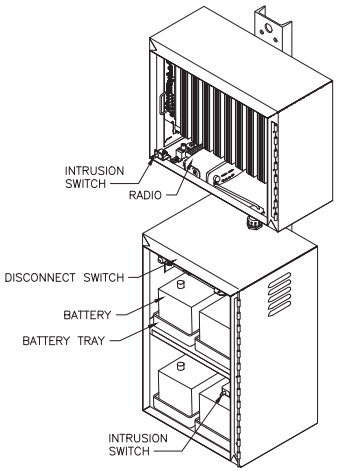

SPECIFICATIONS

POWER

INPUT VOLTAGE:	120V±10% 50 / 60 HZ SINGLE-PHASE
INPUT CURRENT:	4 A MAX.
BATTERY INPUT VOLTAGE:	24 VOLTS (NOM.)
OPERATING VOLTAGE:	24VDC
STANDBY TIME:	> 7 DAYS
CONTINUOUS TIME:	30 MIN.

CONTROL MODULE

SIGNAL DURATION (AUTO RESET):	3 MIN. MAX

MICROPHONE

INPUT IMPEDANCE:	10K OHMS
AUDIO DISTORTION:	1% THD MAX.
MAXIMUM LOAD:	600 OHMS
CONTACT CLOSURE:	(MIN) 500MS<2K OHMS

AMPLIFIER MODULE

CONTROL HOUSING CAN HAVE UP TO EIGHT 400W AMPLIFIERS

FREQUENCY RESPONSE:	(300 TO 3 KHZ)	±3DB (REF. 1KHZ)
OUTPUT VOLTAGE (TONE AND PA):	(TO SPEAKER DRIVERS)	70 VRM (NOM.)
INPUT IMPEDANCE:	(PER AMPLIFIER)	100K OHMS

GENERAL

OPERATING TEMPERATURE**:	-22°F TO 149°F
ENCLOSURES:	ALUMINUM
CONTROL CABINET:	TYPE 4 OR 4X
BATTERY CABINET:	TYPE 4 (VENTED, LOUVERS TO BE SCREENED TO PREVENT INSECT INSTRUSION)

**THE SIREN CAN OPERATE THROUGHOUT THIS TEMPERATURE RANGE PROVIDED THE BATTERY TEMPERATURE IS MAINTAINED AT 0°F OR HIGHER.

BATTERIES

QTY. 4, 12 VOLT HD COMMERCIAL BATTERIES:

MAINTENANCE FREE
LEAD-ACID
DEEP-CYCLE
RECHARGEABLE

WEIGHTS (APPROX)

UV400 4.12 LBS. EACH

CABINETS W/BATTERIES 170 LBS.

TOTAL WEIGHT: 202.96 LBS.

UVTD DIGITAL SIREN CONTROLLER FOR OWS SITE #6

NTS

100% SUBMITTAL (NOT FOR CONSTRUCTION)

OWS SYSTEM DETAILS – 5

VAULT SERIAL #	DATE	MARK	NATURE REVISIONS	MADE BY	CHK'D	REV'D
38384						

ADCOMM Engineering LLC

APPROVED FOR ADVERTISING
LIZ ALZEER
DEPARTMENT OF FINANCE & ADMINISTRATIVE SERVICES
SEATTLE, WASHINGTON . . . . . 20 . . .
BY: . . . . . .
CITY PURCHASING & CONTRACTING SERVICES DIRECTOR

INITIALS AND DATE		
DESIGNED	TK	6/01/22
CHECKED	JPB	6/01/22
DRAWN	TK	6/01/22
CHECKED	JPB	6/01/22

INITIALS AND DATE	
REVIEWED:	
DES.	CONST.
SDOT	PROJ. MGR.
RECEIVED	
REVISED AS BUILT	

ALL WORK SHALL BE DONE IN ACCORDANCE WITH THE CITY OF SEATTLE STANDARD PLANS AND SPECIFICATIONS AND OTHER DOCUMENTS CALLED FOR IN SECTION 0-02.3 OF THE PROJECT MANUAL.

STATE OF WASHINGTON JOSEPH P. BLASCHA 17853 REGISTERED PROFESSIONAL ENGINEER

Seattle Public Utilities

ORDINANCE NO. PW NO. 2022-029

SCALE: NTS

TOLT DAM EARLY WARNING SYSTEM – OTHER PROJECT COMPONENTS

CBB	PC C115120 CO
VPI #	785-45
	T-207
SHEET	102 OF 134

C:\pw_pci_working\jb\osborncomsulting-pw.bentley.com_osborncomsulting-pw-01\jacob romero\dms26270\1-207.dwg
jacobr May-31-22 11:58am

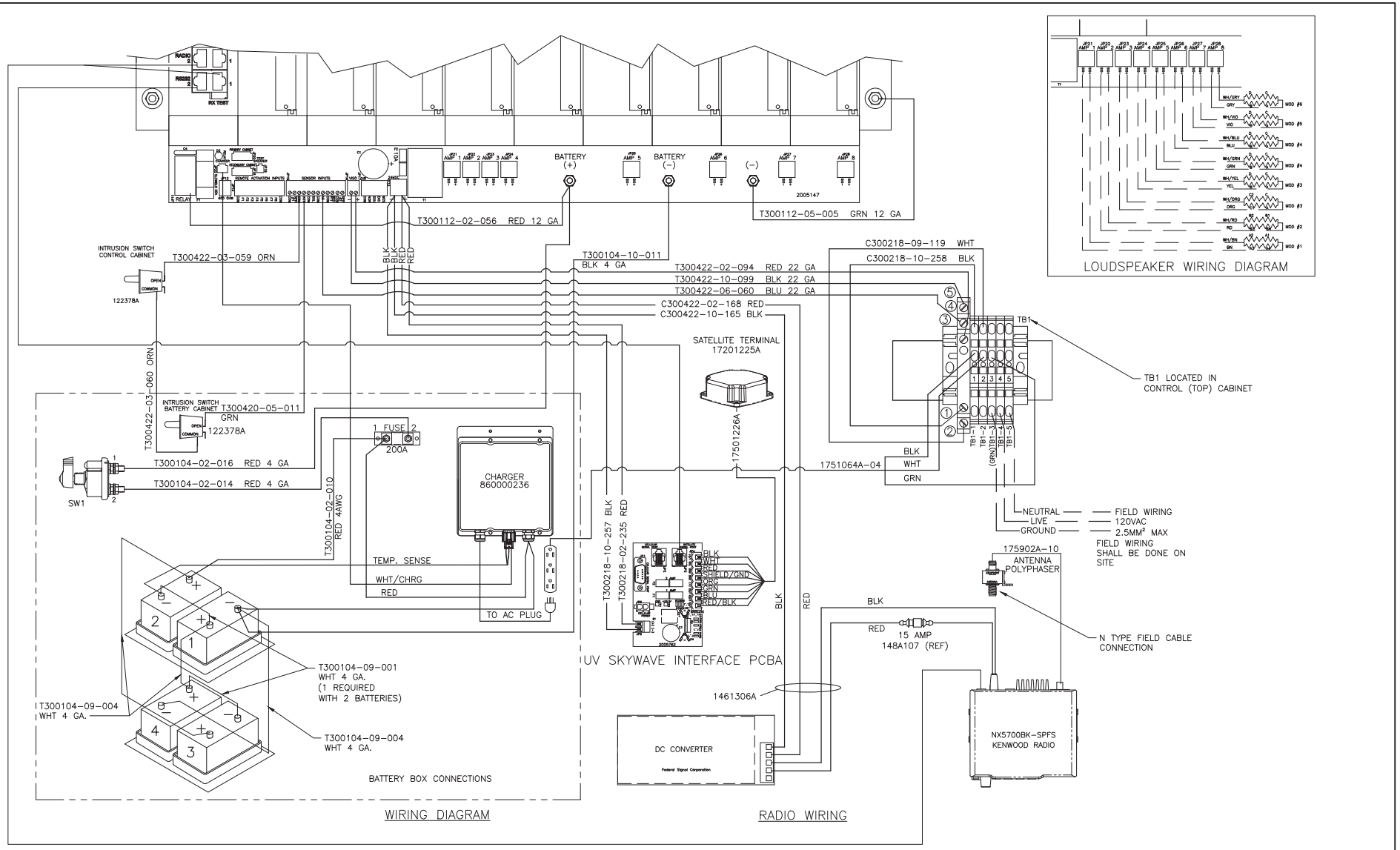

100% SUBMITTAL (NOT FOR CONSTRUCTION)

UVTD DIGITAL SIREN CONTROLLER DIAGRAM FOR OWS SITE #6

NTS

OWS SYSTEM DETAILS – 6

VAULT SERIAL #	DATE	MARK	NATURE REVISIONS	MADE BY	CHK'D	REV'D
383364						

ADCOMM Engineering LLC

APPROVED FOR ADVERTISING
LIZ ALZEER
DEPARTMENT OF FINANCE & ADMINISTRATIVE SERVICES
SEATTLE, WASHINGTON . . . . . 20 . . .
BY: . . . . . .
CITY PURCHASING & CONTRACTING SERVICES DIRECTOR

INITIALS AND DATE		
DESIGNED	TK	6/01/22
CHECKED	JPB	6/01/22
DRAWN	TK	6/01/22
CHECKED	JPB	6/01/22

INITIALS AND DATE	
REVIEWED:	
DES.	CONST.
SDOT	PROJ. MGR.
RECEIVED	
REVISED AS BUILT	

ALL WORK SHALL BE DONE IN ACCORDANCE WITH THE CITY OF SEATTLE STANDARD PLANS AND SPECIFICATIONS AND OTHER DOCUMENTS CALLED FOR IN SECTION 0-02.3 OF THE PROJECT MANUAL.

Seattle Public Utilities

ORDINANCE NO. PW NO. 2022-029

SCALE: NTS

TOLT DAM EARLY WARNING SYSTEM – OTHER PROJECT COMPONENTS

CSB	PC C115120
	CO
VPI #	785-45
	T-208
SHEET	103 OF 134

C:\pw_pcl_working\jpb\osborneconsulting-pw-01\jacob romero\dms26270\T-208.dwg
jacobr May-31-22 11:58am

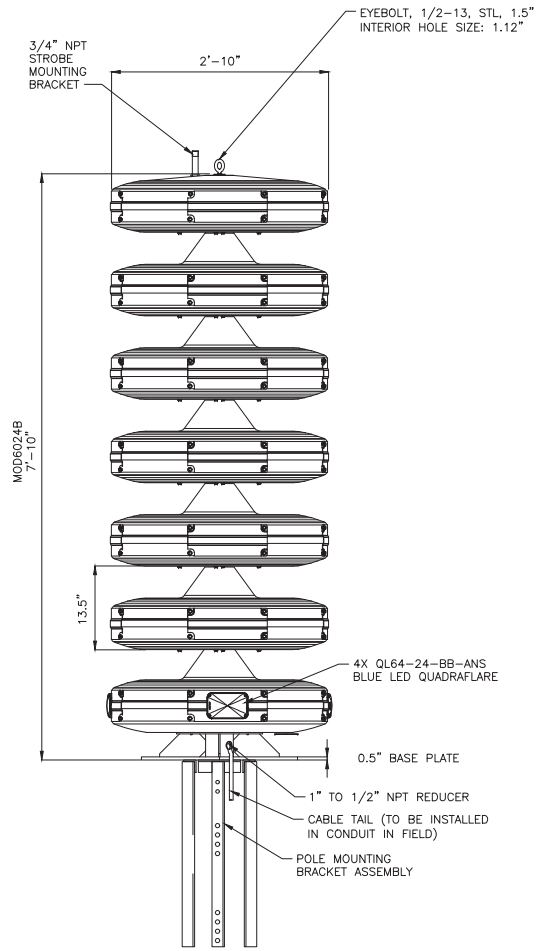

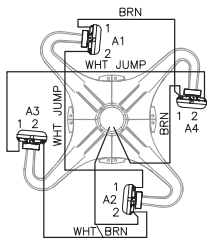

DRIVER ORIENTATION
ACTIVE MODULE 1

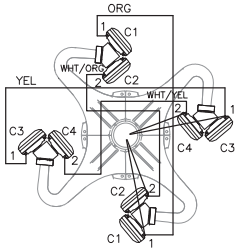

DRIVER ORIENTATION
ACTIVE MODULE 3

ACTIVE MODULE	SPEAKER CABLE	DRIVER – TERMINAL	JUMPER WIRE	DRIVER – TERMINAL	LIGHT
	PNK	---	---	---	BOTTOM MOUNT +
	BLK	---	---	---	BOTTOM MOUNT –
1	---	A1 – 2	WHT	A2 – 1	---
	WHT/BRN	A2 – 2	WHT/BRN	A3 – 2	---
	---	A3 – 1	WHT	A4 – 2	---
	BRN	A4 – 1	BRN	A1 – 1	---
2	---	B1 – 2	WHT	B2 – 1	---
	WHT/RED	B2 – 2	WHT/RED	B3 – 2	---
	---	B3 – 1	WHT	B4 – 2	---
	RED	B4 – 1	RED	B1 – 1	---
3	ORG	C1 – 1	---	---	---
	WHT/ORG	C2 – 2	---	---	---
	YEL	C3 – 1	---	---	---
	WHT/YEL	C4 – 2	---	---	---
4	GRN	D1 – 1	---	---	---
	WHT/GRN	D2 – 2	---	---	---
	BLU	D3 – 1	---	---	---
	WHT/BLU	D4 – 2	---	---	---
5	---	E1 – 2	WHT	E2 – 1	---
	WHT/VIO	E2 – 2	WHT/GRN	E3 – 2	---
	---	E3 – 1	WHT	E4 – 2	---
	VIO	E4 – 1	VIO	E1 – 1	---
6	---	F1 – 2	WHT	F2 – 1	---
	WHT/GRY	F2 – 2	WHT/GRY	F3 – 2	---
	---	F3 – 1	WHT	F4 – 2	---
	GRY	F4 – 1	GRY	F1 – 1	---
	RED/WHT	---	---	---	TOP MOUNT +
	RED/BLK	---	---	---	TOP MOUNT –

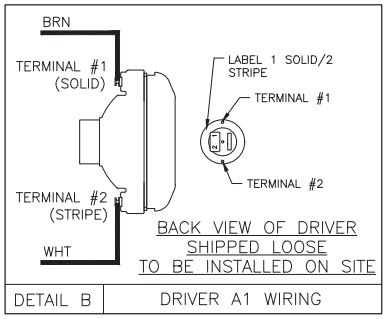

DETAIL B | DRIVER A1 WIRING

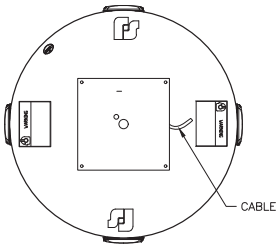

BOTTOM VIEW

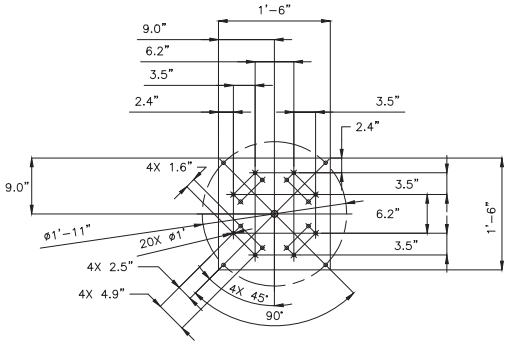

BASE PLATE

SPECIFICATIONS

3200 WATTS
123 DBC @ 100'
EFFECTIVE RANGE @ 70 DBC: 3,400'
WEIGHT: 450 LBS
HEIGHT: 101.0"
PAINTED POWDER COAT OFF–WHITE
FREQUENCY RESPONSE 200–2KHZ
40' MIN. CABLE TAIL FACTORY INSTALLED

CABLE SPECIFICATIONS

CONDUCTOR SIZE:	14 AWG
NUMBER OF CONDUCTORS:	16 COND.
CONDUCTOR MATERIAL:	PVC, 105°C
CABLE O.D.:	1.00" ±10% (NOM)
RESISTANCE:	2.7 OHM PER 1000'
VINYL INSULATION THICKNESS:	0.016"
JACKET COLOR:	GREY

MOD6032B OMNI–DIRECTIONAL SIREN G.A.

NTS

100% SUBMITTAL (NOT FOR CONSTRUCTION)

OWS SYSTEM DETAILS – 7

VAULT SERIAL #	DATE	MARK	NATURE REVISIONS	MADE BY	CHK'D	REV'D
38,384						

ADCOMM Engineering LLC

APPROVED FOR ADVERTISING
LIZ ALZEER
DEPARTMENT OF FINANCE & ADMINISTRATIVE SERVICES
SEATTLE, WASHINGTON . . . . . 20 . . .
BY: . . . . . .
CITY PURCHASING & CONTRACTING SERVICES DIRECTOR

INITIALS AND DATE		
DESIGNED	TK	6/01/22
CHECKED	JPB	6/01/22
DRAWN	TK	6/01/22
CHECKED	JPB	6/01/22

INITIALS AND DATE	
REVIEWED:	
DES.	CONST.
SDOT	PROJ. MGR.
RECEIVED	
REVISED AS BUILT	

ALL WORK SHALL BE DONE IN ACCORDANCE WITH THE CITY OF SEATTLE STANDARD PLANS AND SPECIFICATIONS AND OTHER DOCUMENTS CALLED FOR IN SECTION 0-02.3 OF THE PROJECT MANUAL.

STATE OF WASHINGTON — JAMES P. BLASCHA — 17853 — REGISTERED PROFESSIONAL ENGINEER

Seattle Public Utilities

ORDINANCE NO. PW NO. 2022-029

SCALE: NTS

TOLT DAM EARLY WARNING SYSTEM – OTHER PROJECT COMPONENTS

JOB	PC C115120
	CO
VPI #	785–45
	T-209
SHEET	104 OF 134

C:\pw_pci_working\jb\osborneconsulting-pw-01\jacob romero\dms26270\T-209.dwg
jacobr May-31-22 11:58am

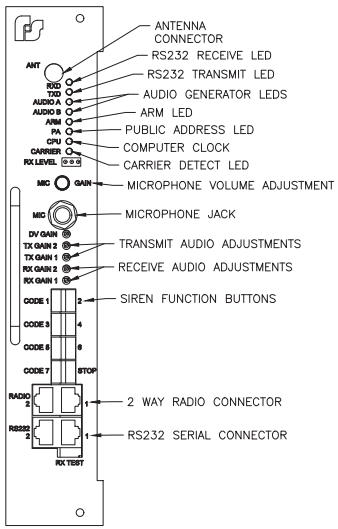

UV CONTROLLER

NTS

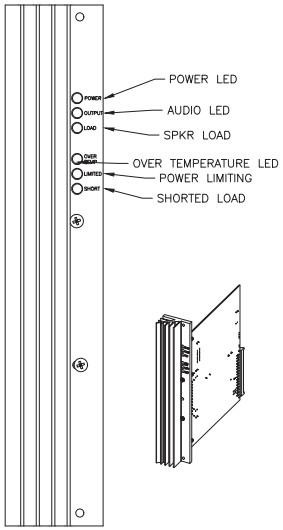

UV400 AMPLIFIER

NTS

UV400 AMP SPECIFICATIONS

INPUT VOLTAGE	24VDC NOMINAL
INPUT CURRENT (SIREN MODE @24VDC W/1kHz SQUARE-WAVE INTO 11Ω)	<20A
INPUT CURRENT (VOICE MODE @24VDC W/1kHz TONE SET TO 67Vrms INTO 11Ω)	<24A

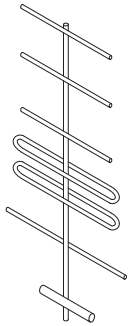

SPECIFICATIONS

VENDOR PART NUMBER:	COMPROD 290-70-HDB
FREQUENCY RANGE:	138-174MHz
NOMINAL GAIN:	9.5dBd
NUMBER OF ELEMENTS:	6
POLARIZATION:	VERTICAL OR HORIZONTAL (VERTICAL FOR THIS APPLICATION)
HORIZONTAL BEAMWIDTH:	62°
VERTICAL BEAMWIDTH:	50°
PATTERN:	DIRECTIONAL
POWER RATING:	350W
LIGHTNING PROTECTION:	DC GROUND
STANDARD TERMINATION:	TYPE N MALE
COLOR:	BLACK
DIMENSIONS:	2743mm L x 1067mm W
WEIGHT:	5.4lbs

VHF YAGI ANTENNA

NTS

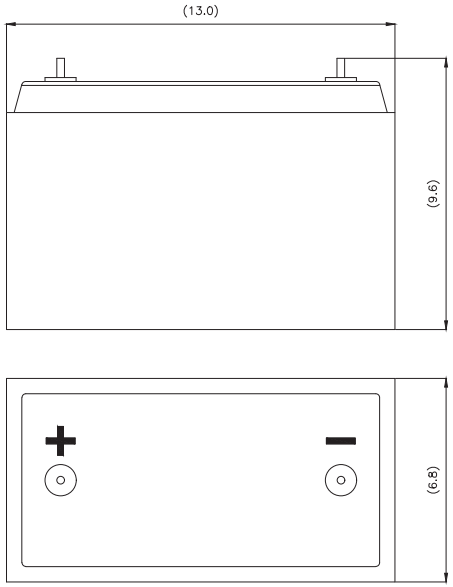

IK-BATT-EXT BATTERY, EXTRA CAPACITY

NTS

BCI GROUP SIZE	CATALOG NUMBER	TYPE D/M	TERMINAL TYPE	TERMINAL STUD SIZE	VOLTS	AMPS FOR LOAD TEST	AMP HRS*	MAXIMUM DIMENSIONS INCHES/MM LENGTH (INCL. FLANGES)	WIDTH	HEIGHT (INCL. TOP POSTS)	APPROX. WEIGHT LBS./KG WET
31	S2000	M	TS	3/8-16	12	290	105	13.0/330.0	6.8/172.0	9.6/243.0	59.0/26.8

TS-TOP STUD *-100 AMP HR. RATING @ 25°C

UNITS: MILLIMETERS [INCHES]

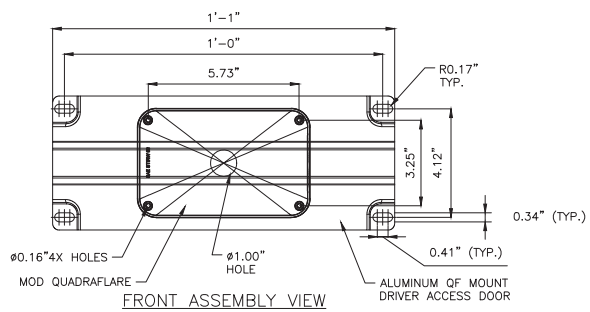

FRONT ASSEMBLY VIEW

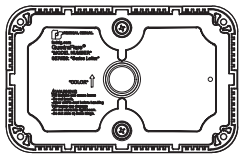

REAR QUADRAFLARE VIEW

MOD-OF-KIT MOD QUADRAFLARE KIT

NTS

SPECIFICATIONS	
NOMINAL VOLTAGE (V)	12V
CAPACITY AT C/100	91 AH
CAPACITY AT C/20	79 AH
CAPACITY AT C/5	69.2 AH
WEIGHT	52 LBS.
PLATE ALLOY	LEAD CALCIUM
POSTS	FORGED TERMINALS & BUSHINGS
CONTAINER/COVER	POLYPROPYLENE
OPERATING TEMPERATURE RANGE	-40°F - 140°F
CHARGE VOLTAGE @77°F(25°C)	
CYCLE FLOAT	13.8-14.6 VOLTS 13.4 -13.6 VOLTS
VENT	SELF-SEALING
TERMINAL	U (SAE/STUD)

RATED NON-SPILLABLE BY ICAO, IATA,AND DOT
MADE IN USA BY EAST PENN MANUFACTURING CO., INC.
DISTRIBUTED BY MK BATTERY, ANAHEIM, CA

100% SUBMITTAL (NOT FOR CONSTRUCTION)

MISCELLANEOUS SIREN COMPONENT DETAILS

VAULT SERIAL #	DATE	MARK	NATURE REVISIONS	MADE BY	CHK'D	REV'D
35364						

ADCOMM Engineering LLC

APPROVED FOR ADVERTISING
LIZ ALZEER
DEPARTMENT OF FINANCE & ADMINISTRATIVE SERVICES
SEATTLE, WASHINGTON . . . . . 20 . . .
BY: . . . . . .
CITY PURCHASING & CONTRACTING SERVICES DIRECTOR

INITIALS AND DATE		
DESIGNED	TK	6/01/22
CHECKED	JPB	6/01/22
DRAWN	TK	6/01/22
CHECKED	JPB	6/01/22

INITIALS AND DATE	
REVIEWED:	
DES.	CONST.
SDOT	PROJ. MGR.
RECEIVED	
REVISED AS BUILT	

ALL WORK SHALL BE DONE IN ACCORDANCE WITH THE CITY OF SEATTLE STANDARD PLANS AND SPECIFICATIONS AND OTHER DOCUMENTS CALLED FOR IN SECTION 0-02.3 OF THE PROJECT MANUAL.

Seattle Public Utilities

ORDINANCE NO. PW NO. 2022-029

SCALE: NTS

TOLT DAM EARLY WARNING SYSTEM - OTHER PROJECT COMPONENTS

CBB	PC C115120 CO
VPI #	785-45
	T-210
SHEET	105 OF 134

C:\pw_pci_working\jpb\osborneconsulting-pw-01\jacob romero\dms26270\T-210.dwg
jacobr May-31-22 11:58am

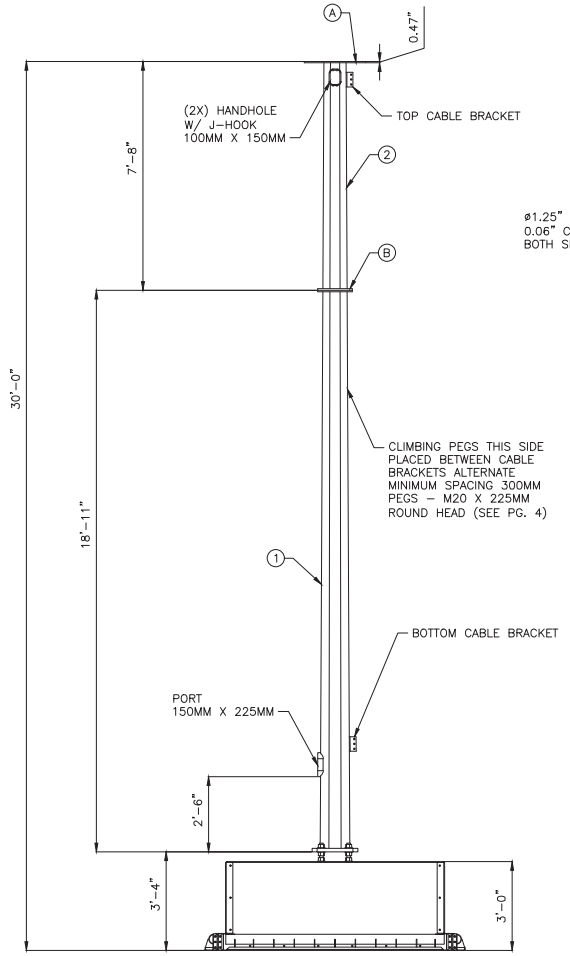

A. FLANGE

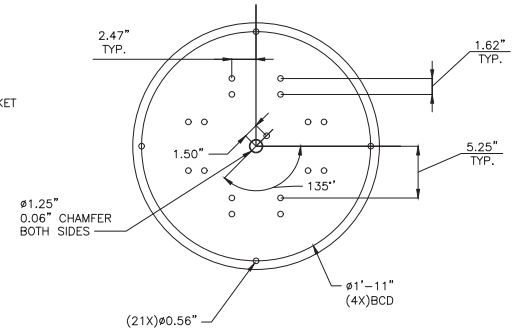

B. FLANGE

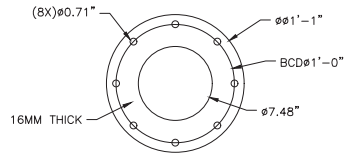

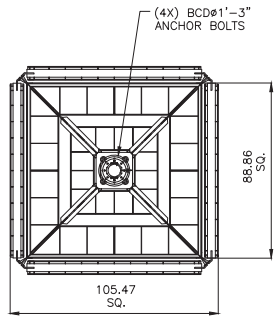

GENERAL NOTES:

1. THIS DRAWING IS CONCEPTUAL ONLY SHOWING THE GENERAL CONCEPT AND CONSTRUCTION OF THE MANUFACTURED ARE–TELECOM BALLAST BASE STEEL POLE.
2. ASSEMBLY OF THE POLE AND BASE SHALL BE DONE IN STRICT ACCORDANCE WITH THE MANUFACTURER'S INSTRUCTIONS.
3. STRUCTURAL CALCULATIONS AND DETAILS FOR THIS POLE ARE INCLUDED IN THE PAUL J. FORD AND COMPANY STRUCTURAL ANALYSIS REPORT, DATED SEPTEMBER 30, 2021 PJF PROJECT: A2121–0046.001.7025 AND PAUL J. FORD AND COMPANY STRUCTURAL ANALYSIS REPORT, DATED SEPTEMBER 30, 2021 PJF PROJECT: A2121–0047.001.7025.

1. SURVIVAL WIND SPEED: PER CODE
   - STRUCTURE CLASS – PER CODE
   - TOPOGRAPHIC – PER CODE
   - EXPOSURE – PER CODE
2. DESIGN AND WELDING CODES:
   - TIA–222–G
   - AWS DL1
3. MATERIAL (OR EQUIVALENT)
   - POLE: ASTM A572 GR65 (Q420)
   - BASEPLATE: ASTM A572 GR50 (Q355)
   - TOP/ HINGE FLANGE: ASTM A572 GR50 (Q355)
4. ANCHOR BOLTS: (4X) M36X4 X 1000MM – GR 8.8
   - (3X) NUT (4X) WASHER
   - OPTIONAL (1 1/2–6 X 39IN GRADE ASTM F1554 G55)
   - HOT DIP GALV. PER ASTM F2329
5. FLANGE BOLTS: (8X) M16X2 X 60MM – GR 8.8
   - (1X) NUT (2X)WASHER
   - OPTIONAL (5/8–11 X 2.5IN GR A325)
   - HOT DIP GALV. PER ASTM F2329
6. POLE HAS 8 SIDES
7. FINISH HOT DIP GALVANIZING PER ASTM A123
8. POLE SECTION DETAILS

POLE SECTION	#1	#2
THICKNESS – (IN)	0.197	0.197
LENGTH – (IN)	227.75	92.8
TOP DIA. – (IN)	9.84	8.94
BOTTOM DIA. – (IN)	12	9.83
MIN SLIP – (IN)		NA
SECTION WEIGHT (LB)	288.2	251

OWS 5 VISTA HOUSE POLE DETAIL

NTS

100% SUBMITTAL (NOT FOR CONSTRUCTION)

OWS 5 VISTA HOUSE POLE DETAILS – 1

ADCOMM Engineering LLC

APPROVED FOR ADVERTISING
LIZ ALZEER
DEPARTMENT OF FINANCE & ADMINISTRATIVE SERVICES
SEATTLE, WASHINGTON . . . . . 20 . . .
BY: . . . . . .
CITY PURCHASING & CONTRACTING SERVICES DIRECTOR

INITIALS AND DATE			INITIALS AND DATE
DESIGNED TK	6/01/22		REVIEWED: DES. SDOT / CONST. PROJ. MGR.
CHECKED JPB	6/01/22		
DRAWN TK	6/01/22		RECEIVED
CHECKED JPB	6/01/22		REVISED AS BUILT

ALL WORK SHALL BE DONE IN ACCORDANCE WITH THE CITY OF SEATTLE STANDARD PLANS AND SPECIFICATIONS AND OTHER DOCUMENTS CALLED FOR IN SECTION 0–02.3 OF THE PROJECT MANUAL.

JOSEPH P. BLASCHKA, STATE OF WASHINGTON, 17853, REGISTERED PROFESSIONAL ENGINEER

Seattle Public Utilities

ORDINANCE NO. PW NO. 2022–029

SCALE: NTS

TOLT DAM EARLY WARNING SYSTEM – OTHER PROJECT COMPONENTS

CDB PC C115120 CO

VPI # 785–45

T-211

SHEET 106 OF 134

VAULT SERIAL #	DATE	MARK	NATURE REVISIONS	MADE	CHK'D	REV'D
58,584						

C:\pw_pol_working\jcbcomconsulting-pw-bentley.com_osborneconsulting-pw-01\jacob romero\dms26270\T-211.dwg
jacobr May-31-22 11:59am

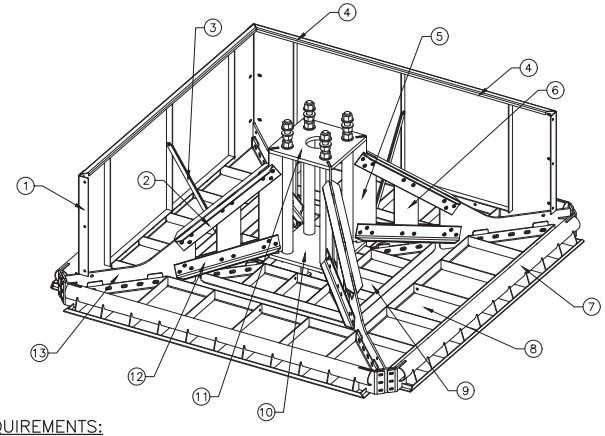

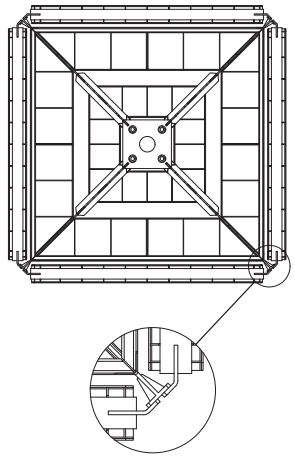

DETAIL A

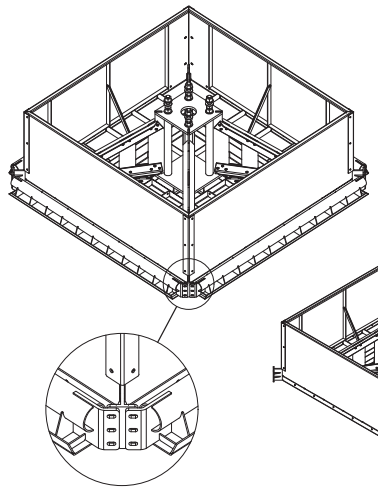

DETAIL B

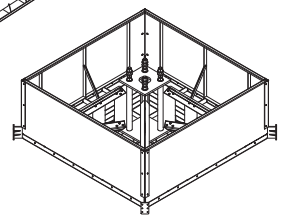

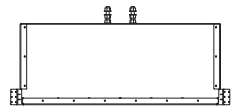

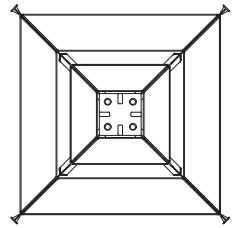

TOTAL SURFACE AREA

- 54.96 FT^2

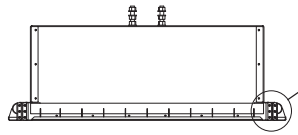

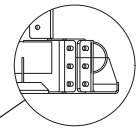

DETAIL C

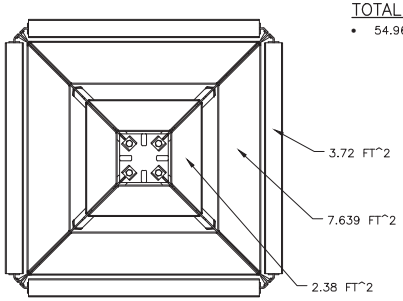

BALLAST REQUIREMENTS:

- BALLAST VOLUME = 6.1 CU-YDS, 165 CU-FT
- UNIT WEIGHT
  - CU-FT = 100 LBS
  - CU-YD = 2700 LBS

AFS350 BILL OF MATERIALS			
#	DESCRIPTION	QTY.	WEIGHT (KG/ LBS)
1	CORNER BRACKET	4	5.5
2	UPPER CHORD	8	11.9
3	BRACE	8	1.72
4	SIDEWALL	4	111.1
5	ANCHOR SPOKE	4	60.1
6	CENTER WEB	4	23.8
7	OUTER BEARING PLATE	4	127.6
8	OUTER BALLAST TRAY	4	103.4
9	INNER BALLAST TRAY	4	40.3
10	LOWER SPLICE PLATE	1	103.6
11	UPPER SPLICE PLATE	1	83
12	LOWER CHORD	8	10.34
13	TRUSS HEEL PLATE	4	45.32

AFS350 BOLTS, NUTS & WASHERS (OTHER EQUIVALENT GRADES ACCEPTABLE)										
#	UNIT	BOLT SIZE	LENGTH	WIDTH ACROSS FLATS	THREAD LENGTH	GRADE	COATING	NUT QTY.	WASHER QTY.	BOLT QTY.
14	IMPERIAL	1/2-13	1 3/16"	7/8"	FULL THREAD	A325	HOT DIP GALV.	56	112	56
15	IMPERIAL	1/2-13	2 3/8"	7/8"	FULL THREAD	A325	HOT DIP GALV.	24	48	24
16	IMPERIAL	3/4-10	2 3/16"	1 1/8"	FULL THREAD	A325	HOT DIP GALV.	72	144	72
17	IMPERIAL	1 1/2-6	39"	2 3/16"	12"	A325	HOT DIP GALV.	12	16	4

GENERAL NOTES

1. THIS DRAWING IS CONCEPTUAL ONLY SHOWING THE GENERAL CONCEPT AND CONSTRUCTION OF THE MANUFACTURED ARE-TELECOM BALLAST BASE STEEL POLE.
2. ASSEMBLY OF THE POLE AND BASE SHALL BE DONE IN STRICT ACCORDANCE WITH THE MANUFACTURER'S INSTRUCTIONS.
3. STRUCTURAL CALCULATIONS AND DETAILS FOR THIS POLE ARE INCLUDED IN THE PAUL J. FORD AND COMPANY STRUCTURAL ANALYSIS REPORT, DATED SEPTEMBER 30, 2021 PJF PROJECT: A2121-0046.001.7025 AND PAUL J. FORD AND COMPANY STRUCTURAL ANALYSIS REPORT, DATED SEPTEMBER 30, 2021 PJF PROJECT: A2121-0047.001.7025.

OWS 5 VISTA HOUSE POLE BASE DETAILS

NTS

100% SUBMITTAL (NOT FOR CONSTRUCTION)

OWS 5 VISTA HOUSE POLE DETAILS – 2

ADCOMM Engineering LLC

APPROVED FOR ADVERTISING
LIZ ALZEER
DEPARTMENT OF FINANCE & ADMINISTRATIVE SERVICES
SEATTLE, WASHINGTON . . . . . 20 . . .
BY: . . . . . .
CITY PURCHASING & CONTRACTING SERVICES DIRECTOR

INITIALS AND DATE		
DESIGNED	TK	6/01/22
CHECKED	JPB	6/01/22
DRAWN	TK	6/01/22
CHECKED	JPB	6/01/22

INITIALS AND DATE	
REVIEWED:	
DES.	CONST.
SDOT	PROJ. MGR.
RECEIVED	
REVISED AS BUILT	

ALL WORK SHALL BE DONE IN ACCORDANCE WITH THE CITY OF SEATTLE STANDARD PLANS AND SPECIFICATIONS AND OTHER DOCUMENTS CALLED FOR IN SECTION 0-02.3 OF THE PROJECT MANUAL.

STATE OF WASHINGTON JOSEPH P. BLASCHKA 17853 REGISTERED PROFESSIONAL ENGINEER

Seattle Public Utilities

ORDINANCE NO. PW NO. 2022-029

SCALE: NTS

TOLT DAM EARLY WARNING SYSTEM – OTHER PROJECT COMPONENTS

CBB	PC C115120
	CO
VPI #	785-45
	T-212
SHEET	107 OF 134

VAULT SERIAL #	DATE	MARK	NATURE REVISIONS	MADE	CHK'D	REV'D
38384						

C:\pw_pcl_working\ft\osbornconsulting-pw.bentley.com_osbornconsulting-pw-01\jacob romero\dms26270\T-212.dwg
jacobr May-31-22 11:59am

CABLE MOUNT BRACKET

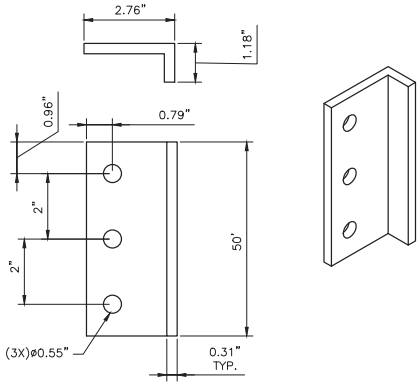

CABLE GUIDE BRACKET

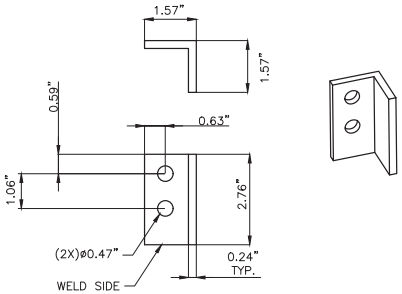

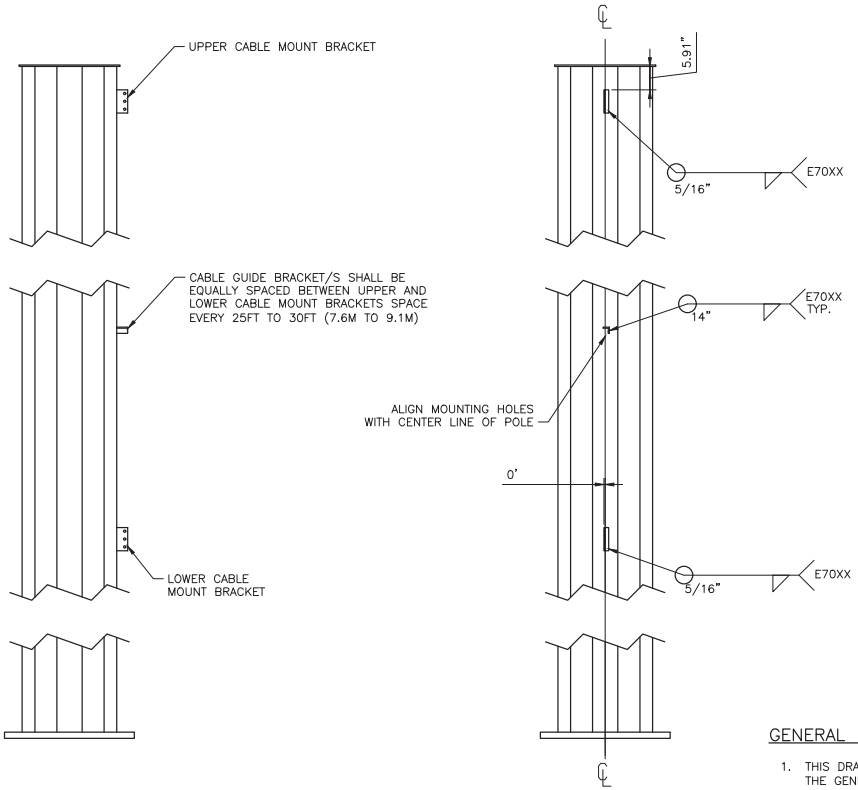

#	DESCRIPTION (OPTIONAL GRADE)	QTY	WEIGHT LB
1	CABLE MOUNT BRACKET–ASTM A572 GR 50 (Q345 OR Q355)	2	1.85
2	CABLE GUIDE BRACKET–ASTM A572 GR 50 (Q345 OR Q355)	*1 OR MORE	0.51

GENERAL NOTES

1. THIS DRAWING IS CONCEPTUAL ONLY SHOWING THE GENERAL CONCEPT AND CONSTRUCTION OF THE MANUFACTURED ARE–TELECOM BALLAST BASE STEEL POLE.
2. ASSEMBLY OF THE POLE AND BASE SHALL BE DONE IN STRICT ACCORDANCE WITH THE MANUFACTURER'S INSTRUCTIONS.
3. STRUCTURAL CALCULATIONS AND DETAILS FOR THIS POLE ARE INCLUDED IN THE PAUL J. FORD AND COMPANY STRUCTURAL ANALYSIS REPORT, DATED SEPTEMBER 30, 2021 PJF PROJECT: A2121–0046.001.7025 AND PAUL J. FORD AND COMPANY STRUCTURAL ANALYSIS REPORT, DATED SEPTEMBER 30, 2021 PJF PROJECT: A2121–0047.001.7025.

FABRICATION NOTES:

1. *THE NUMBER OF CABLE GUIDES WILL VARY BASED ON HEIGHT OF POLE AND SHALL BE EQUALLY SPACED BETWEEN THE UPPER AND LOWER CABLE MOUNT BRACKETS.
2. ALL PLATE MATERIAL SHALL SHALL HAVE A MINIMUM YIELD STRENGTH OF 345 MPA (50 KSI)
3. ALL WELDING SHALL CONFORM TO THE MINIMUM REQUIREMENTS OF AWS D1.1
4. ALL WELDING SHALL BE DONE BY WELDERS QUALIFIED UNDER AWS SPECIFICATIONS, USING E70XX, LOW HYDROGEN ELECTRODES
5. HOT DIP GALVANIZED IN ACCORDANCE WITH ASTM A123
6. DEBUR ALL SHARP EDGES

CABLE MOUNT BRACKET DETAILS

NTS

VAULT SERIAL #	DATE	MARK	NATURE REVISIONS	MADE	CHK'D	REV'D
38384						

100% SUBMITTAL (NOT FOR CONSTRUCTION)

OWS 5 VISTA HOUSE POLE DETAILS – 3

ADCOMM Engineering LLC

APPROVED FOR ADVERTISING
LIZ ALZEER
DEPARTMENT OF FINANCE & ADMINISTRATIVE SERVICES
SEATTLE, WASHINGTON . . . . . 20 . . .
BY: . . . . . .
CITY PURCHASING & CONTRACTING SERVICES DIRECTOR

INITIALS AND DATE			INITIALS AND DATE
DESIGNED	TK	6/01/22	REVIEWED: DES. CONST. SDOT PROJ. MGR.
CHECKED	JPB	6/01/22	
DRAWN	TK	6/01/22	RECEIVED
CHECKED	JPB	6/01/22	REVISED AS BUILT

ALL WORK SHALL BE DONE IN ACCORDANCE WITH THE CITY OF SEATTLE STANDARD PLANS AND SPECIFICATIONS AND OTHER DOCUMENTS CALLED FOR IN SECTION 0-02.3 OF THE PROJECT MANUAL.

Seattle Public Utilities

ORDINANCE NO. PW NO. 2022-029

SCALE: NTS

TOLT DAM EARLY WARNING SYSTEM – OTHER PROJECT COMPONENTS

KCB PC CO	C115120
VPI #	785-45
	T-213
SHEET	108 OF 134

C:\pw_pci_working\jb\oakbornconsulting-pw-01\jacob romero\dms26270\T-213.dwg
jacobr May-31-22 11:59am

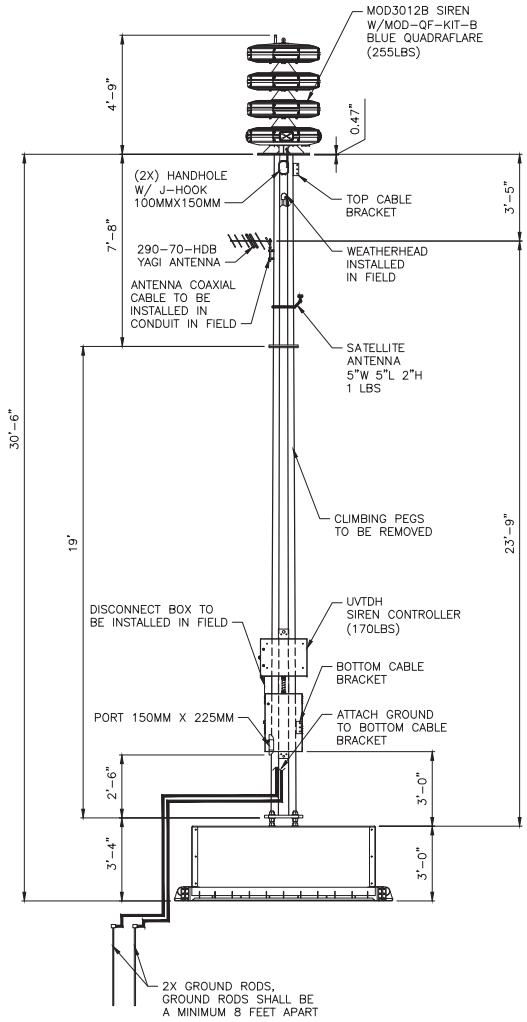

GENERAL NOTES

1. THIS DRAWING IS CONCEPTUAL ONLY SHOWING THE GENERAL CONCEPT AND CONSTRUCTION OF THE MANUFACTURED ARE-TELECOM BALLAST BASE STEEL POLE.
2. ASSEMBLY OF THE POLE AND BASE SHALL BE DONE IN STRICT ACCORDANCE WITH THE MANUFACTURER'S INSTRUCTIONS.
3. STRUCTURAL CALCULATIONS AND DETAILS FOR THIS POLE ARE INCLUDED IN THE PAUL J. FORD AND COMPANY STRUCTURAL ANALYSIS REPORT, DATED SEPTEMBER 30, 2021 PJF PROJECT: A2121-0046.001.7025 AND PAUL J. FORD AND COMPANY STRUCTURAL ANALYSIS REPORT, DATED SEPTEMBER 30, 2021 PJF PROJECT: A2121-0047.001.7025.

OWS 5 VISTA HOUSE POLE COMPLETE ASSEMBLY DETAIL

NTS

VAULT SERIAL #	DATE	MARK	NATURE REVISIONS	MADE	CHK'D	REV'D
38384						

C:\pw_pci_working\jbcobornconsulting-pw.bentley.com_osbornconsulting-pw-01\jacob romero\dms26270\T-214.dwg
jacobr May-31-22 11:59am

100% SUBMITTAL (NOT FOR CONSTRUCTION)

OWS 5 VISTA HOUSE POLE DETAILS – 4

ADCOMM Engineering LLC

APPROVED FOR ADVERTISING
LIZ ALZEER
DEPARTMENT OF FINANCE & ADMINISTRATIVE SERVICES
SEATTLE, WASHINGTON . . . . . 20 . . .
BY: . . . . . .
CITY PURCHASING & CONTRACTING SERVICES DIRECTOR

INITIALS AND DATE		
DESIGNED	TK	6/01/22
CHECKED	JPB	6/01/22
DRAWN	TK	6/01/22
CHECKED	JPB	6/01/22

INITIALS AND DATE	
REVIEWED:	
DES.	CONST.
SDOT	PROJ. MGR.
RECEIVED	
REVISED AS BUILT	

ALL WORK SHALL BE DONE IN ACCORDANCE WITH THE CITY OF SEATTLE STANDARD PLANS AND SPECIFICATIONS AND OTHER DOCUMENTS CALLED FOR IN SECTION 0-02.3 OF THE PROJECT MANUAL.

JACOB P. BLASCHKA
STATE OF WASHINGTON
17853
REGISTERED PROFESSIONAL ENGINEER

Seattle Public Utilities

ORDINANCE NO. PW NO. 2022-029

SCALE: NTS

TOLT DAM EARLY WARNING SYSTEM – OTHER PROJECT COMPONENTS

CBB	PC C115120 CO
VPI #	785-45
	T-214
SHEET	109 OF 134

GENERAL NOTES

1. THIS DRAWING DESCRIBES THE CONCEPTUAL EQUIPMENT LAYOUT AND PLACEMENT OF SIREN COMPONENTS ON THE WOOD POLES.
2. STRUCTURAL CALCULATIONS AND INSTALLATION DETAILS FOR THIS POLE ARE INCLUDED IN FEDERAL SIGNAL DRAWINGS 8759–1 AND 8759–2, DATED OCTOBER 1, 2021.
3. INSTALLATION OF THE POLE SHALL BE DONE IN STRICT ACCORDANCE WITH THE MANUFACTURER'S INSTRUCTIONS.
4. CONTROL AND ANTENNA LINES TO BE MOUNTED EITHER IN CONDUIT OR HALF–ROUND ON THE WOOD POLE.

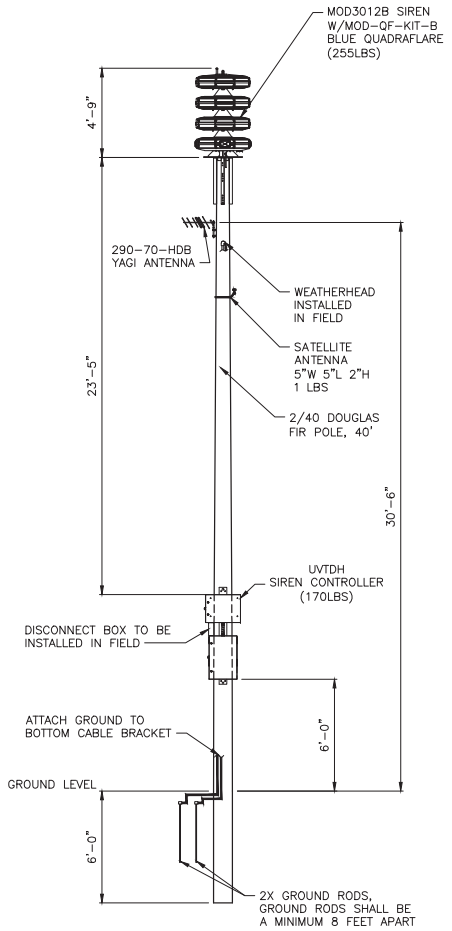

POLE COMPLETE ASSEMBLY DETAIL (OWS #9,10)

NTS

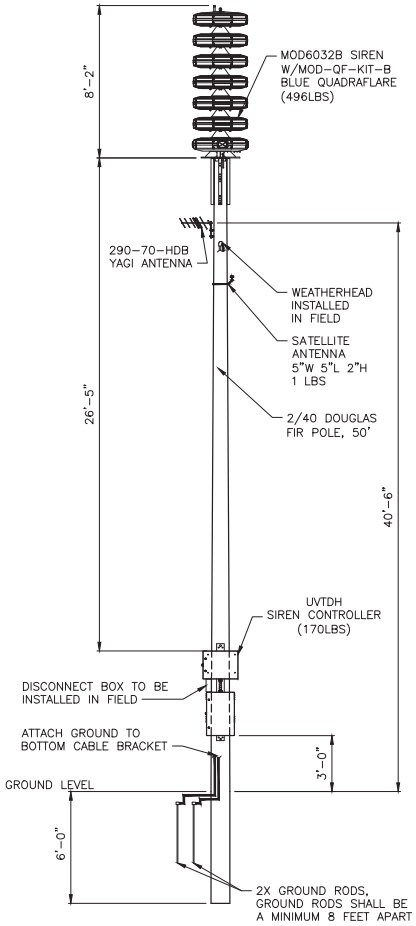

POLE COMPLETE ASSEMBLY DETAIL (OWS #6)

NTS

VAULT SERIAL #	DATE	MARK	NATURE REVISIONS	MADE BY	CHK'D	REV'D
38384						

100% SUBMITTAL (NOT FOR CONSTRUCTION)

PERMANENT POLE DETAILS

ADCOMM Engineering LLC

APPROVED FOR ADVERTISING
LIZ ALZEER
DEPARTMENT OF FINANCE & ADMINISTRATIVE SERVICES
SEATTLE, WASHINGTON . . . . . 20 . . .
BY: . . . . . .
CITY PURCHASING & CONTRACTING SERVICES DIRECTOR

INITIALS AND DATE			INITIALS AND DATE
DESIGNED TK	6/28/22		REVIEWED: DES. CONST. SDOT PROJ. MGR.
CHECKED JPB	6/28/22		
DRAWN TK	6/28/22		RECEIVED
CHECKED JPB	6/28/22		REVISED AS BUILT

ALL WORK SHALL BE DONE IN ACCORDANCE WITH THE CITY OF SEATTLE STANDARD PLANS AND SPECIFICATIONS AND OTHER DOCUMENTS CALLED FOR IN SECTION 0–02.3 OF THE PROJECT MANUAL.

JOSEPH P. BLASCHKA, STATE OF WASHINGTON, 17853, REGISTERED PROFESSIONAL ENGINEER

Seattle Public Utilities

ORDINANCE NO. PW NO. 2022–029

SCALE: NTS

TOLT DAM EARLY WARNING SYSTEM – OTHER PROJECT COMPONENTS

CBB PC CO	C115120
VPI #	785–45
	T-215
SHEET	110 OF 134

C:\pw_pcl_working\jb\osborneconsulting-pw.bentley.com__osborneconsulting-pw-01\jacob romero\dms26270\T-215.dwg
jacobr May-31-22 11:59am

GENERAL NOTES:

1. USE APPROPRIATE ADJUSTMENT HOLES IN PIPE MOUNT BRACKETS (ITEM #1) AND IN UPPER GATE FOOT WELDMENT (ITEMS #2) TO ENSURE ANTENNA MOUNTING PIPE IS PLUMB TO GROUND.

PARTS LIST

ITEM	QTY	PART NO.	PART DESCRIPTION	LENGTH	UNIT WT.	NET WT.
1	1	ADP238	ADJUSTABLE PIPE MOUNT, 2/-3/8"		25.74	25.74
2	1	CFM	UPPER GATE FOOT WELDMENT		13.90	13.90
3	1	CFS	LOWER GATE FOOT WELDMENT		12.72	12.72
4	8	G12R-12	1/2" X 12" THREADED ROD (HDG.)		0.35	2.81
4	8	G12R-15	1/2" X 15" THREADED ROD (HDG.)		0.35	2.81
5	16	G12FW	1/2" HDG USS FLATWASHER		0.03	0.54
6	16	G12LW	1/2" HDG LOCKWASHER		0.01	0.22
7	16	G12NUT	1/2" HDG HEAVY 2H HEX NUT		0.07	1.14
8	2	GBB	GATE BACKING BAR		4.53	9.06
9	2	A1205	1/2" X 5" A325 HDG BOLT	5 IN	0.34	0.69
10	2	A12NUT	1/2" HDG A325 HEX NUT		0.07	0.14
					TOTAL WT. #	76.25

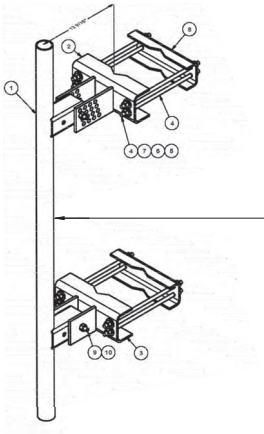

NOT SHOWN TO SCALE

VAULT SERIAL #	DATE	MARK	NATURE REVISIONS	MADE	CHK'D	REV'D
3834						

C:\pw_pcl_workingdir\osborneconsulting-pw.bentley.com_osborneconsulting-pw-01\jacob romero\dms26270\T-219.dwg
jacobr May-31-22 12:00pm

100% SUBMITTAL (NOT FOR CONSTRUCTION)

SWAN – YAGI ANTENNA MOUNTING DETAILS

ADCOMM Engineering LLC

APPROVED FOR ADVERTISING
LIZ ALZEER
DEPARTMENT OF FINANCE & ADMINISTRATIVE SERVICES
SEATTLE, WASHINGTON . . . . . 20 . . .
BY: . . . . . .
CITY PURCHASING & CONTRACTING SERVICES DIRECTOR

INITIALS AND DATE		
DESIGNED	TK	6/01/22
CHECKED	JPB	6/01/22
DRAWN	TK	6/01/22
CHECKED	JPB	6/01/22

INITIALS AND DATE	
REVIEWED:	
DES.	CONST.
SDOT	PROJ. MGR.
RECEIVED	
REVISED AS BUILT	

ALL WORK SHALL BE DONE IN ACCORDANCE WITH THE CITY OF SEATTLE STANDARD PLANS AND SPECIFICATIONS AND OTHER DOCUMENTS CALLED FOR IN SECTION 0-02.3 OF THE PROJECT MANUAL.

STATE OF WASHINGTON JOSEPH P. BLASCHA 17853 REGISTERED PROFESSIONAL ENGINEER

Seattle Public Utilities

ORDINANCE NO. PW NO. 2022-029

SCALE: NTS

TOLT DAM EARLY WARNING SYSTEM – OTHER PROJECT COMPONENTS

CBB PC C115120 CO

VPI # 785-45

T-219

SHEET 114 OF 134

GENERAL NOTES:

1. USE APPROPRIATE ADJUSTMENT HOLES IN PIPE MOUNT BRACKETS (ITEMS #1) AND IN UPPER GATE FOOT WELDMENT (ITEM #2) TO ENSURE ANTENNA MOUNTING PIPE IS PLUMB TO GROUND.
2. USE SITEPRO, TAM–LL LARGE LEG ADAPTER KIT IN CONJUNCTION WITH ADP238–U PIPE MOUNT (SEE CHART 2)
3. SEATTLE IT WILL PROVIDE THE MICROWAVE RF UNIT FOR THE CONTRACTOR FORCES TO INSTALL ON THE TOWER. THE CONTRACTOR SHALL SUPPLY THE MOUNT AS SPECIFIED ABOVE.

PARTS LIST

ITEM	QTY	PART NO.	PART DESCRIPTION	LENGTH	UNIT WT.	NET WT.
1	1	ADP238	ADJUSTABLE PIPE MOUNT, 2/–3/8"		25.74	25.74
2	1	CFM	UPPER GATE FOOT WELDMENT		13.90	13.90
3	1	CFS	LOWER GATE FOOT WELDMENT		12.72	12.72
4	8	G12R–12	1/2" X 12" THREADED ROD (HDG.)		0.35	2.81
4	8	G12R–15	1/2" X 15" THREADED ROD (HDG.)		0.35	2.81
5	16	G12FW	1/2" HDG USS FLATWASHER		0.03	0.54
6	16	G12LW	1/2" HDG LOCKWASHER		0.01	0.22
7	16	G12NUT	1/2" HDG HEAVY 2H HEX NUT		0.07	1.14
8	2	GBB	GATE BACKING BAR		4.53	9.06
9	2	A1205	1/2" X 5" A325 HDG BOLT	5 IN	0.34	0.69
10	2	A12NUT	1/2" HDG A325 HEX NUT		0.07	0.14
					TOTAL WT. #	76.25

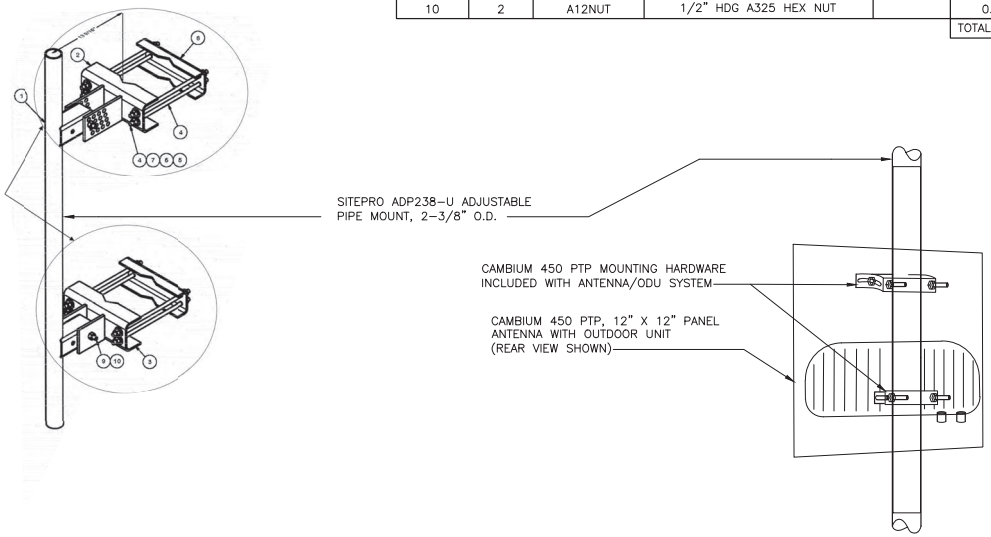

NOT SHOWN TO SCALE

VAULT SERIAL #	DATE	MARK	NATURE	MADE	CHK'D	REV'D
38,384			REVISIONS			

C:\pw_pol_working\osborncomsulting-pw.bentley.com_osborncomsulting-pw-01\jacob romero\dms26270\t-220.dwg
jacobr May-31-22 12:00pm

100% SUBMITTAL (NOT FOR CONSTRUCTION)

LARGE LEG ADAPTER KIT

NTS

SWAN – PANEL ANTENNA MOUNTING DETAILS 1

ADCOMM Engineering LLC

APPROVED FOR ADVERTISING
LIZ ALZEER
DEPARTMENT OF FINANCE & ADMINISTRATIVE SERVICES
SEATTLE, WASHINGTON . . . . . 20 . . .

BY: . . . . . .
CITY PURCHASING & CONTRACTING SERVICES DIRECTOR

INITIALS AND DATE			INITIALS AND DATE	
DESIGNED	TK	6/01/22	REVIEWED: DES.	CONST.
CHECKED	JPB	6/01/22	SDOT	PROJ. MGR.
DRAWN	TK	6/01/22	RECEIVED	
CHECKED	JPB	6/01/22	REVISED AS BUILT	

ALL WORK SHALL BE DONE IN ACCORDANCE WITH THE CITY OF SEATTLE STANDARD PLANS AND SPECIFICATIONS AND OTHER DOCUMENTS CALLED FOR IN SECTION 0–02.3 OF THE PROJECT MANUAL.

STATE OF WASHINGTON JOSEPH P. BLASCHKA 17853 REGISTERED PROFESSIONAL ENGINEER

Seattle Public Utilities

ORDINANCE NO. PW NO. 2022–029

SCALE: NTS

TOLT DAM EARLY WARNING SYSTEM – OTHER PROJECT COMPONENTS

CBB PC C115120 CO

VPI # 785–45

T-220

SHEET 115 OF 134

PARTS LIST

ITEM	QTY	PART NO.	PART DESCRIPTION	LENGTH	UNIT WT.	NET WT.
1	4	230044	LARGE LEG ADAPTER, UNIVERSAL SLIDING TAPERED PIPE MOUNT, ADJUSTABLE PLATE	15 IN	6.11	24.43
2	16	G1202	1/2" X 2" HDG HEX BOLT GR5	2 IN	0.18	2.81
3	8	G12R-20	1/2" X 20" GALV. THREADED ROD		1.12	8.92
4	32	G12FW	1/2" HDG USS FLATWASHER	3/32 IN	0.03	1.09
5	32	G12LW	1/2" HDG LOCKWASHER	1/8 IN	0.01	0.44
6	32	G12NUT	1/2" HDG HEAVY 2H HEX NUT		0.07	2.29
					TOTAL WT. #	41.44

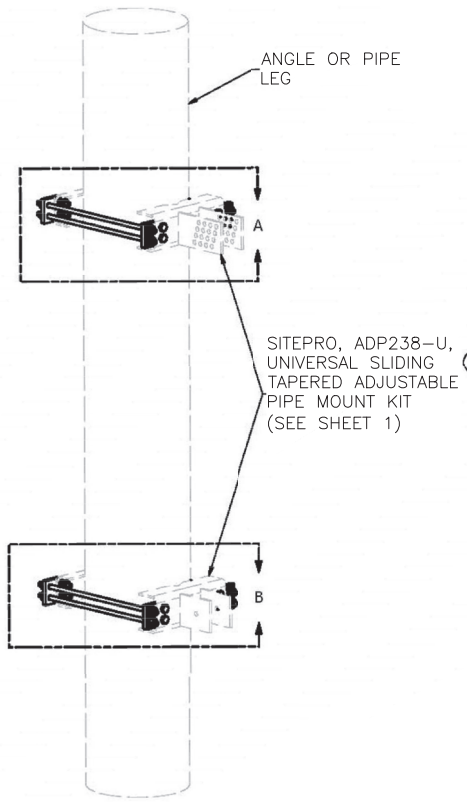

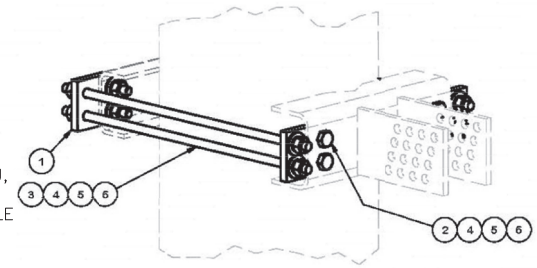

DETAIL A

UPPER MOUNTING BRACKET

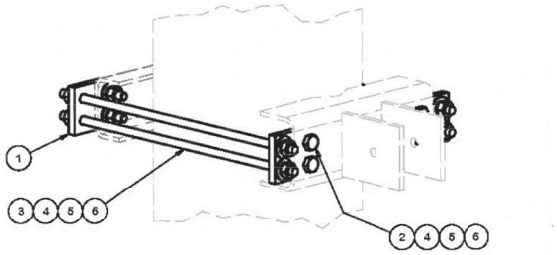

DETAIL B

LOWER MOUNTING BRACKET

VAULT SERIAL #	DATE	MARK	NATURE	MADE	CHK'D	REV'D
38384			REVISIONS			

C:\pw_pci_working\$\osborncons\ulting-pw.bentley.com_osborncons\ulting-pw-01\jacob romero\dms26270\T-221.dwg
jacobr May-31-22 12:00pm

100% SUBMITTAL (NOT FOR CONSTRUCTION)

LARGE LEG ADAPTER KIT

NTS

SWAN – PANEL ANTENNA MOUNTING DETAILS 2

ADCOMM Engineering LLC

APPROVED FOR ADVERTISING
LIZ ALZEER
DEPARTMENT OF FINANCE & ADMINISTRATIVE SERVICES
SEATTLE, WASHINGTON . . . . . 20 . . .

BY: . . . . . .
CITY PURCHASING & CONTRACTING SERVICES DIRECTOR

INITIALS AND DATE		
DESIGNED	TK	6/01/22
CHECKED	JPB	6/01/22
DRAWN	TK	6/01/22
CHECKED	JPB	6/01/22

INITIALS AND DATE	
REVIEWED:	
DES.	CONST.
SDOT	PROJ. MGR.
RECEIVED	
REVISED AS BUILT	

ALL WORK SHALL BE DONE IN ACCORDANCE WITH THE CITY OF SEATTLE STANDARD PLANS AND SPECIFICATIONS AND OTHER DOCUMENTS CALLED FOR IN SECTION 0-02.3 OF THE PROJECT MANUAL.

STATE OF WASHINGTON · JOSEPH P. BLASCHA · 17853 · REGISTERED PROFESSIONAL ENGINEER

Seattle Public Utilities

ORDINANCE NO. PW NO. 2022-029

SCALE: NTS

TOLT DAM EARLY WARNING SYSTEM – OTHER PROJECT COMPONENTS

JOB	PC C115120 CO
VPI #	785-45
	T-221
SHEET	116 OF 134

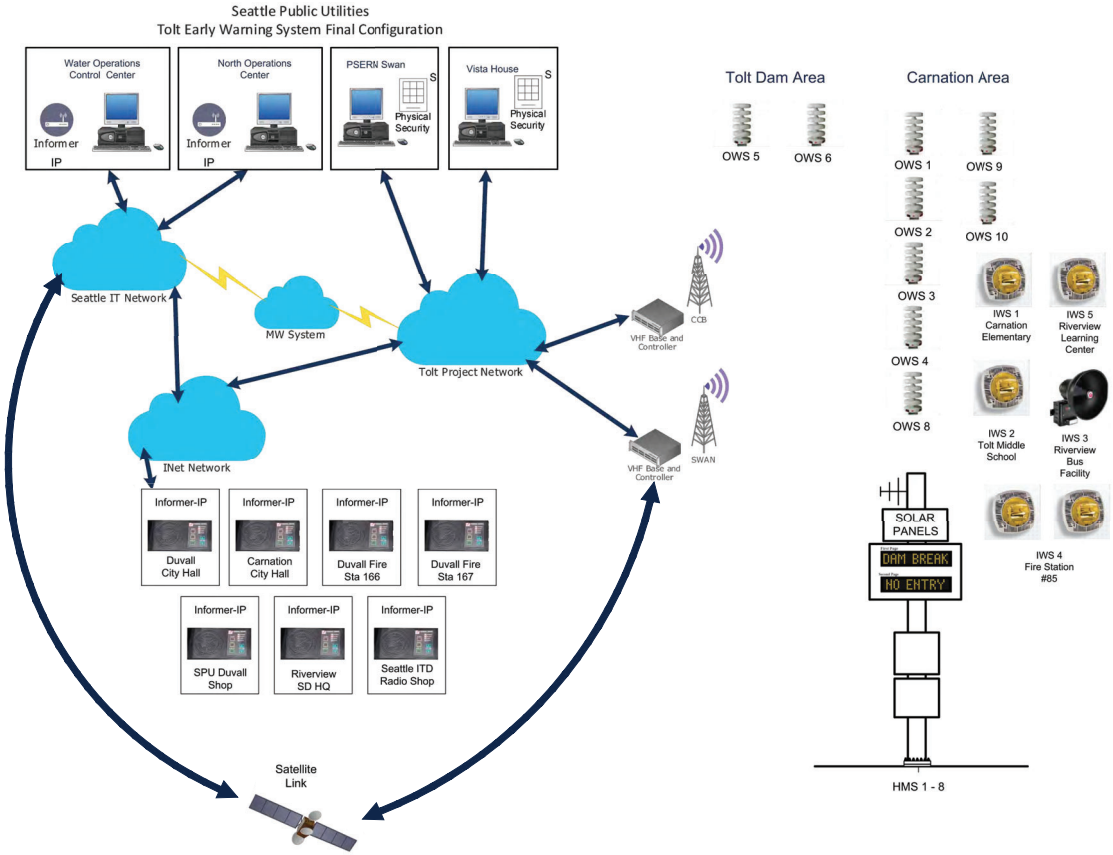

68%0,77$/ 127)25 &216758&7,21

SYSTEM DETAIL DIAGRAM – 1

VAULT SERIAL #	DATE	MARK	NATURE REVISIONS	MADE	CHK'D	REV'D
58,584						

C:\pw_pcl_workingdir\osborneconsulting-pw.bentley.com_osborneconsulting-pw-01\jacob romero\dms26270\T-301.dwg
jacobr May-31-22 12:00pm

ADCOMM Engineering LLC

APPROVED FOR ADVERTISING
LIZ ALZEER
DEPARTMENT OF FINANCE & ADMINISTRATIVE SERVICES
SEATTLE, WASHINGTON . . . . . 20 . . .
BY: . . . . . .
CITY PURCHASING & CONTRACTING SERVICES DIRECTOR

INITIALS AND DATE		
DESIGNED	TK	6/01/22
CHECKED	JPB	6/01/22
DRAWN	TK	6/01/22
CHECKED	JPB	6/01/22

INITIALS AND DATE	
REVIEWED:	
DES.	CONST.
SDOT	PROJ. MGR.
RECEIVED	
REVISED AS BUILT	

ALL WORK SHALL BE DONE IN ACCORDANCE WITH THE CITY OF SEATTLE STANDARD PLANS AND SPECIFICATIONS AND OTHER DOCUMENTS CALLED FOR IN SECTION 0-02.3 OF THE PROJECT MANUAL.

JOSEPH P. BLASCHKA
STATE OF WASHINGTON
17853
REGISTERED PROFESSIONAL ENGINEER

Seattle Public Utilities

ORDINANCE NO. PW NO. 2022-029

SCALE: NONE

TOLT DAM EARLY WARNING SYSTEM – OTHER PROJECT COMPONENTS

CCB PC CO	C115120
VPI #	785-45
	T-301
SHEET	117 OF 134

GENERAL NOTES:

1. FAILURE TO CONFIRM DEFAULTS TO YES.
2. THIS DELAY IS TO ALLOW FOR SCADA TROUBLESHOOTING.

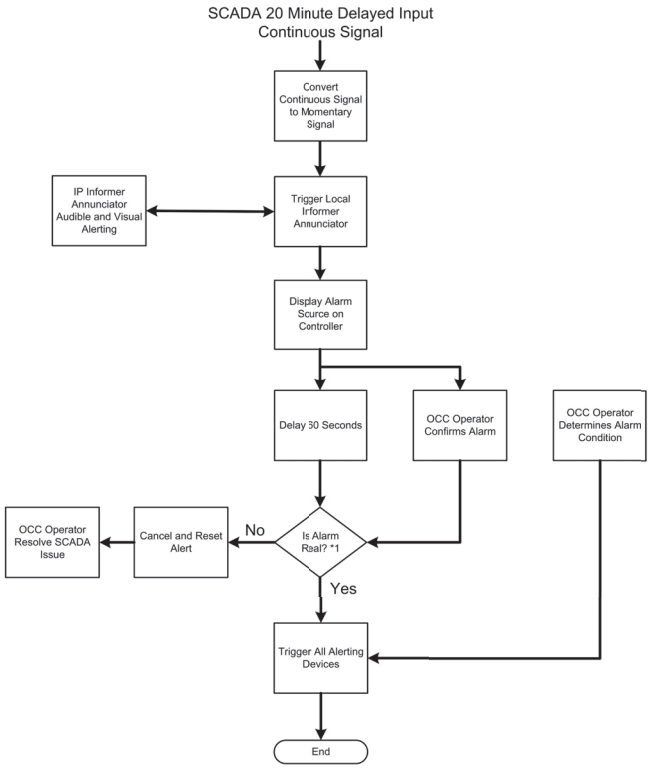

SEATTLE PUBLIC UTILITIES
TOLT EARLY WARNING SYSTEM EARLY DEPLOYMENT
OPERATIONAL FLOW

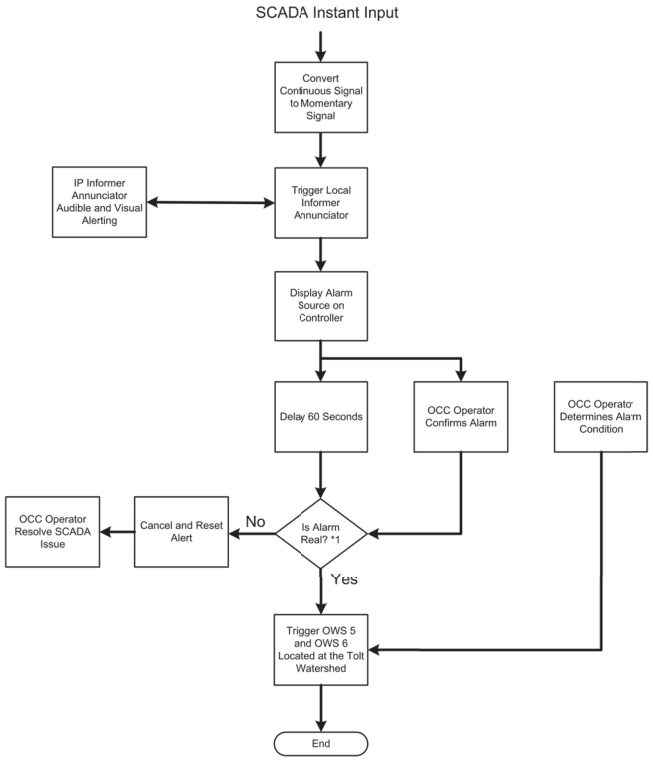

SEATTLE PUBLIC UTILITIES
TOLT EARLY WARNING SYSTEM INSTANT SCADA
INPUT OPERATIONAL FLOW

VAULT SERIAL #	DATE	MARK	NATURE	MADE	CHK'D	REV'D
38,384			REVISIONS			

C:\pw_pci_working\ft\osborneconsulting-pw.bentley.com_osborneconsulting-pw-01\jacob romero\dms26270\T-302.dwg
jacobr May-31-22 12:50pm

100% SUBMITTAL (NOT FOR CONSTRUCTION)

SYSTEM DETAIL DIAGRAM – 2

ADCOMM Engineering LLC

APPROVED FOR ADVERTISING
LIZ ALZEER
DEPARTMENT OF FINANCE & ADMINISTRATIVE SERVICES
SEATTLE, WASHINGTON . . . . . 20 . . .
BY: . . . . . .
CITY PURCHASING & CONTRACTING SERVICES DIRECTOR

INITIALS AND DATE		
DESIGNED	TK	6/01/22
CHECKED	JPB	6/01/22
DRAWN	TK	6/01/22
CHECKED	JPB	6/01/22

INITIALS AND DATE	
REVIEWED:	
DES.	CONST.
SDOT	PROJ. MGR.
RECEIVED	
REVISED AS BUILT	

ALL WORK SHALL BE DONE IN ACCORDANCE WITH THE CITY OF SEATTLE STANDARD PLANS AND SPECIFICATIONS AND OTHER DOCUMENTS CALLED FOR IN SECTION 0-02.3 OF THE PROJECT MANUAL.

JOSEPH P. BLASCHKA
STATE OF WASHINGTON
17853
REGISTERED PROFESSIONAL ENGINEER

Seattle Public Utilities

ORDINANCE NO. PW NO. 2022-029

SCALE: NONE

TOLT DAM EARLY WARNING SYSTEM – OTHER PROJECT COMPONENTS

JOB PC C115120
CO
VPI # 785-45
T-302
SHEET 118 OF 134

SYMBOL LEGEND

ITEM	QTY	PART #	DESCRIPTION
	2	X–PCD1	DESKTOP COMPUTER, W/MONITOR, SPEAKER
	2	X–PCIO	PC INTERFACE, RELAY INPUTS AND OUTPUTS FOR PLC
	1	SS2000+R	RACK MOUNT DTMF/FSK ENCODER WITH KEYBOARD, DISPLAY
	1	–	BASE STATION RADIO, 110W, 136–174MHz
	5	–	UNIVERSAL POLE CLAMP ANTENNA MOUNT SET, PD246, WITH 572126 2" X 3' GALVANIZED STEEL PIPE
	6	–	UNIVERSAL WALL CLAMP ANTENNA MOUNT SET, PD241, WITH 572126 2" X 3' GALVANIZED STEEL PIPE
	11	COMPROD 290–70	YAGI ANTENNA, 138–174MHz (TO BE VERTICALLY POLARIZED AND THE AZIMUTH FOR EACH SIREN AND ANNUNCIATOR LOCATION)
	5	UVRI–BH100	CONTROL CABINET, INDOOR, WITH 100W AMPLIFIER, VHF RADIO, Q–UV–ISAT2 UV SATELLITE UPGRADE KIT
	1	AM300	LOUDSPEAKER, 15W, TAPPABLE, HAZARDOUS AREA
	5	EN–WSSAA	EMERGENCY NOTIFICATION, WALL SPEAKER/STROBE, ALERT, AMBER
	5	UVTDH	ULTRAVOICE SIREN CONTROLLER, 2–WAY, VHF RADIO, 120VAC, WITH UV400 400W AMPLIFIERS, IK–BATT–EXT DEEP CYCLE BATTERIES, Q–UV–ISAT2 UV SATELLITE UPGRADE KIT
	2	I–IPW	INFORMER, IP, I/O WALL MOUNT

ITEM	QTY	PART #	DESCRIPTION
	4	MOD3012B W/MOD–QF–KIT–B	SIREN, 1200W OMNI–DIRECTION MODULATOR, FOR MOUNTING ON WOOD POLES, WITH BLUE QUADRAFLARE KIT
	1	MOD6032B W/MOD–QF–KIT–B	SIREN, 3200W OMNI–DIRECTION MODULATOR, FOR MOUNTING ON WOOD POLES, WITH BLUE QUADRAFLARE KIT
	5	TK–PO–CUSPOLE	CUSTOM POLE, 2/40 DOUGLAS FIR, 40'

VAULT SERIAL #	DATE	MARK	NATURE REVISIONS	MADE	CHK'D	REV'D
35384						

C:\pw_pol_working\osborncontsulting-pw.bentley.com_osborncontsulting-pw-01\jacob romero\dms26270\T-303.dwg
jacobr May-31-22 12:00pm

100% SUBMITTAL (NOT FOR CONSTRUCTION)

SYSTEM DETAIL DIAGRAM – 3

ADCOMM Engineering LLC

APPROVED FOR ADVERTISING
LIZ ALZEER
DEPARTMENT OF FINANCE & ADMINISTRATIVE SERVICES
SEATTLE, WASHINGTON . . . . . 20 . . .
BY: . . . . . .
CITY PURCHASING & CONTRACTING SERVICES DIRECTOR

INITIALS AND DATE		
DESIGNED	TK	6/01/22
CHECKED	JPB	6/01/22
DRAWN	TK	6/01/22
CHECKED	JPB	6/01/22

INITIALS AND DATE
REVIEWED:
DES. CONST.
SDOT PROJ. MGR.
RECEIVED
REVISED AS BUILT
ALL WORK SHALL BE DONE IN ACCORDANCE WITH THE CITY OF SEATTLE STANDARD PLANS AND SPECIFICATIONS AND OTHER DOCUMENTS CALLED FOR IN SECTION 0-02.3 OF THE PROJECT MANUAL.

JOSEPH P. BLASCHKA
STATE OF WASHINGTON
17853
REGISTERED PROFESSIONAL ENGINEER

Seattle Public Utilities
ORDINANCE NO. PW NO. 2022-029
SCALE: NONE

TOLT DAM EARLY WARNING SYSTEM – OTHER PROJECT COMPONENTS

CIP PC CO	C115120
VPI #	785–45
	T-303
SHEET	119 OF 134

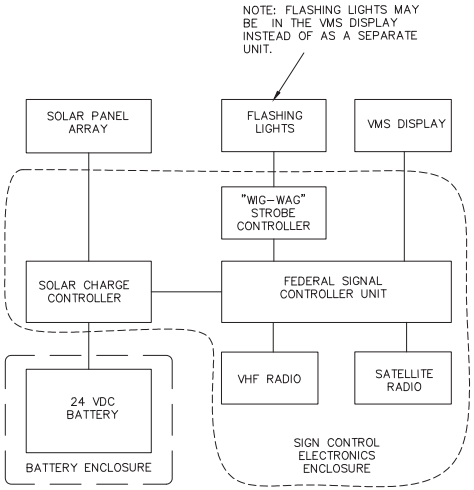

HIGHWAY MESSAGE SIGN CONCEPT BLOCK DIAGRAM

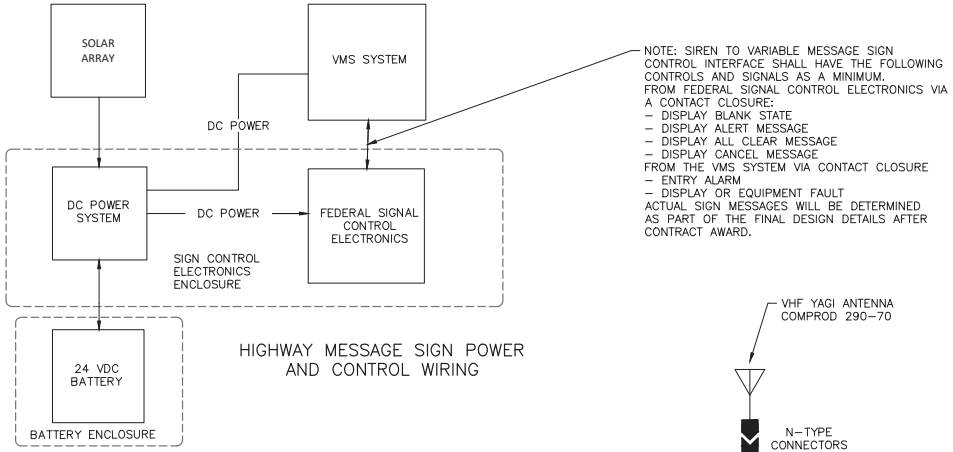

HIGHWAY MESSAGE SIGN POWER AND CONTROL WIRING

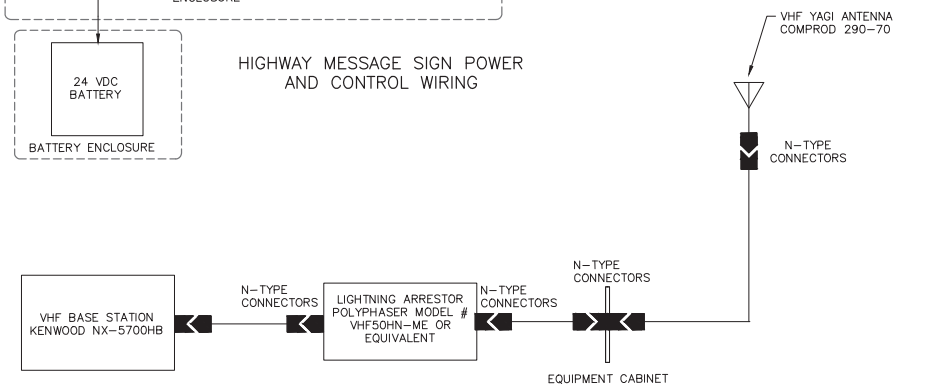

VHF ANTENNA SYSTEM 1-LINE DIAGRAM

VAULT SERIAL #	DATE	MARK	NATURE	MADE	CHK'D	REV'D
35364			REVISIONS			

C:\pw_pcl_working\ab\osbornconsulting-pw.bentley.com_osbornconsulting-pw-01\jacob romero\dms26270\t-304.dwg
jacobr May-31-22 12:00pm

100% SUBMITTAL (NOT FOR CONSTRUCTION)

HMS SYSTEM DETAILS

NTS

SYSTEM DETAIL DIAGRAM – 4

ADCOMM Engineering LLC

APPROVED FOR ADVERTISING
LIZ ALZEER
DEPARTMENT OF FINANCE & ADMINISTRATIVE SERVICES
SEATTLE, WASHINGTON . . . . . 20 . . .
BY: . . . . . .
CITY PURCHASING & CONTRACTING SERVICES DIRECTOR

INITIALS AND DATE			INITIALS AND DATE
DESIGNED	TK	6/01/22	REVIEWED: DES. CONST. SDOT PROJ. MGR.
CHECKED	JPB	6/01/22	
DRAWN	TK	6/01/22	RECEIVED
CHECKED	JPB	6/01/22	REVISED AS BUILT

ALL WORK SHALL BE DONE IN ACCORDANCE WITH THE CITY OF SEATTLE STANDARD PLANS AND SPECIFICATIONS AND OTHER DOCUMENTS CALLED FOR IN SECTION 0-02.3 OF THE PROJECT MANUAL.

STATE OF WASHINGTON JOSEPH P. BLASCHKA 17853 REGISTERED PROFESSIONAL ENGINEER

Seattle Public Utilities

ORDINANCE NO. PW NO. 2022-029

SCALE: NONE

TOLT DAM EARLY WARNING SYSTEM – OTHER PROJECT COMPONENTS

JOB	PC C115120 CO
VPI #	785-45
	T-304
SHEET	120 OF 134

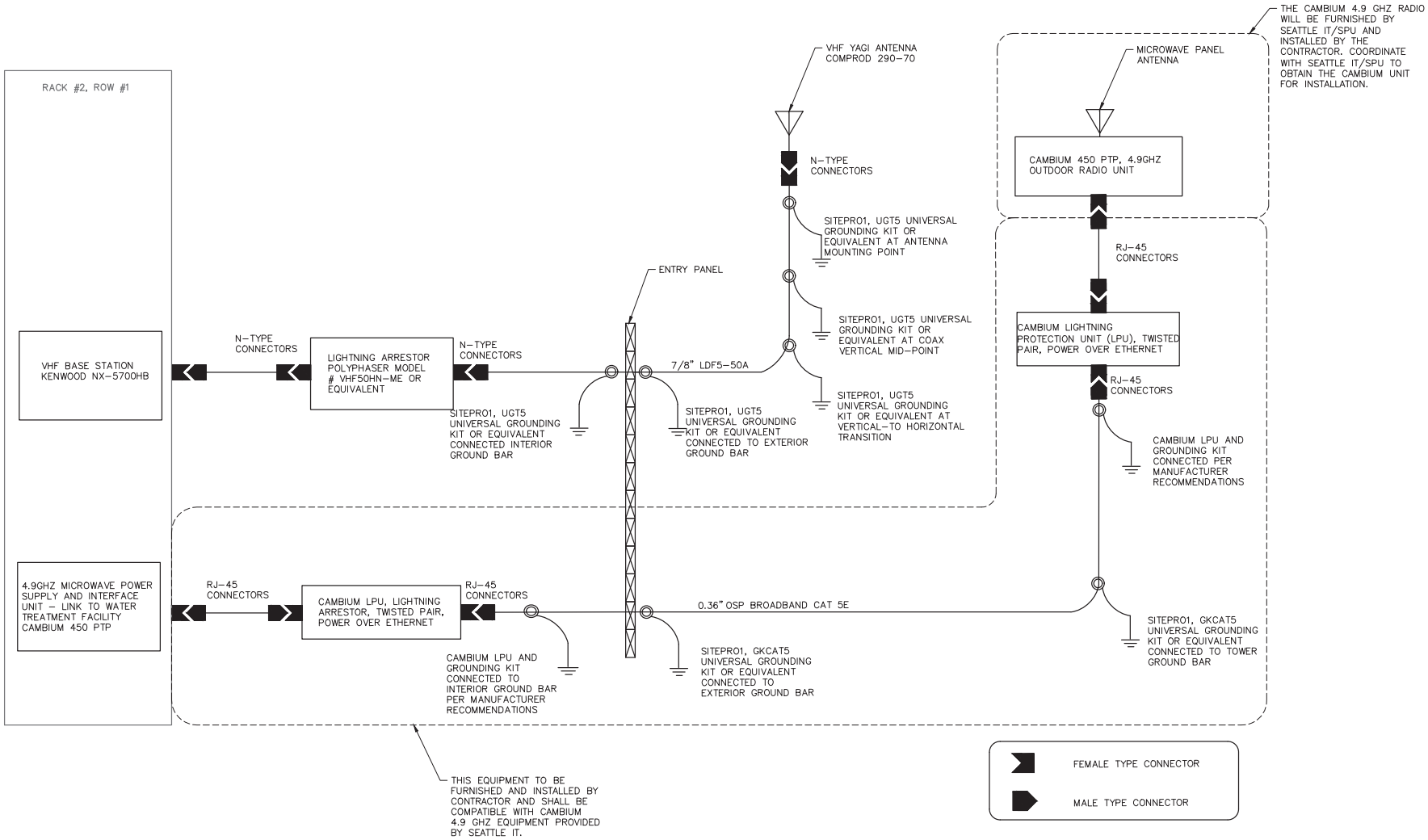

VAULT SERIAL #	DATE	MARK	NATURE	MADE	CHK'D	REV'D
38,384			REVISIONS			

C:\pw_pol_workings$\osbornconsulting-pw.bentley.com_osbornconsulting-pw-01\jacob romero\dms26270\T-305.dwg
jacobr May-31-22 12:00pm

100% SUBMITTAL (NOT FOR CONSTRUCTION)

SWAN ANTENNA AND CONTROL CABLE DIAGRAM

ADCOMM Engineering LLC

APPROVED FOR ADVERTISING
LIZ ALZEER
DEPARTMENT OF FINANCE & ADMINISTRATIVE SERVICES
SEATTLE, WASHINGTON . . . . . 20 . . .
BY: . . . . . .
CITY PURCHASING & CONTRACTING SERVICES DIRECTOR

INITIALS AND DATE		
DESIGNED	TK	6/01/22
CHECKED	JPB	6/01/22
DRAWN	TK	6/01/22
CHECKED	JPB	6/01/22

INITIALS AND DATE	
REVIEWED:	
DES.	CONST.
SDOT	PROJ. MGR.
RECEIVED	
REVISED AS BUILT	

ALL WORK SHALL BE DONE IN ACCORDANCE WITH THE CITY OF SEATTLE STANDARD PLANS AND SPECIFICATIONS AND OTHER DOCUMENTS CALLED FOR IN SECTION 0-02.3 OF THE PROJECT MANUAL.

STATE OF WASHINGTON JAMES P. BLASCHKA 17853 REGISTERED PROFESSIONAL ENGINEER

Seattle Public Utilities

ORDINANCE NO. PW NO. 2022-029

SCALE: NONE

TOLT DAM EARLY WARNING SYSTEM – OTHER PROJECT COMPONENTS

CDB PC CO	C115120
VPI #	785-45
	T-305
SHEET	121 OF 134

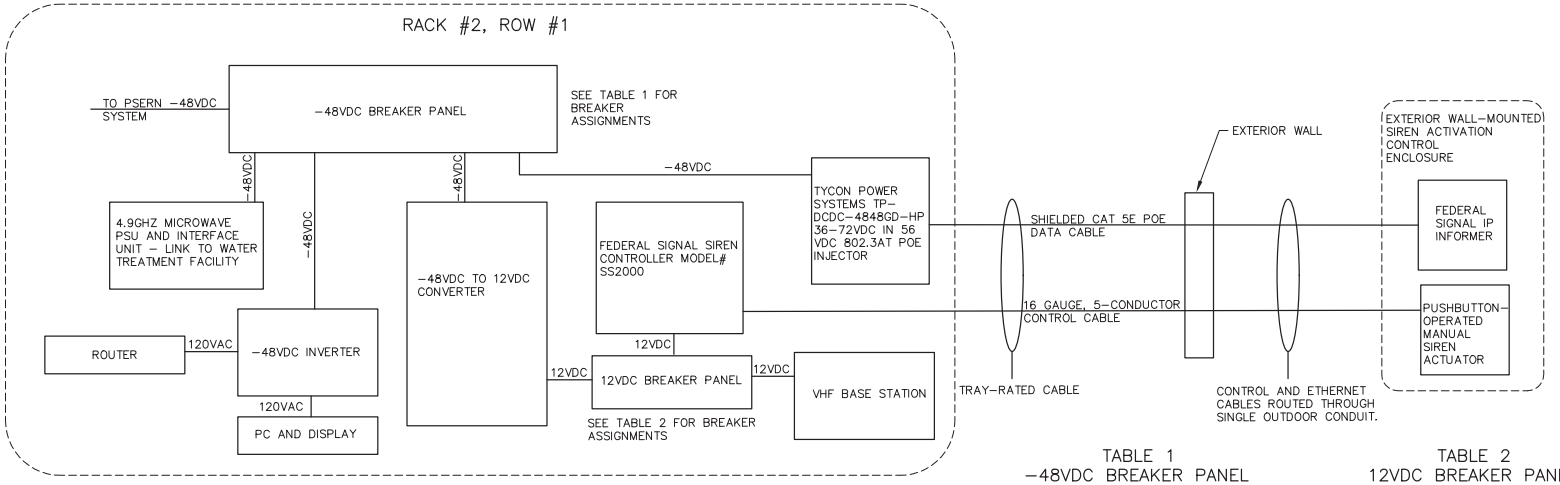

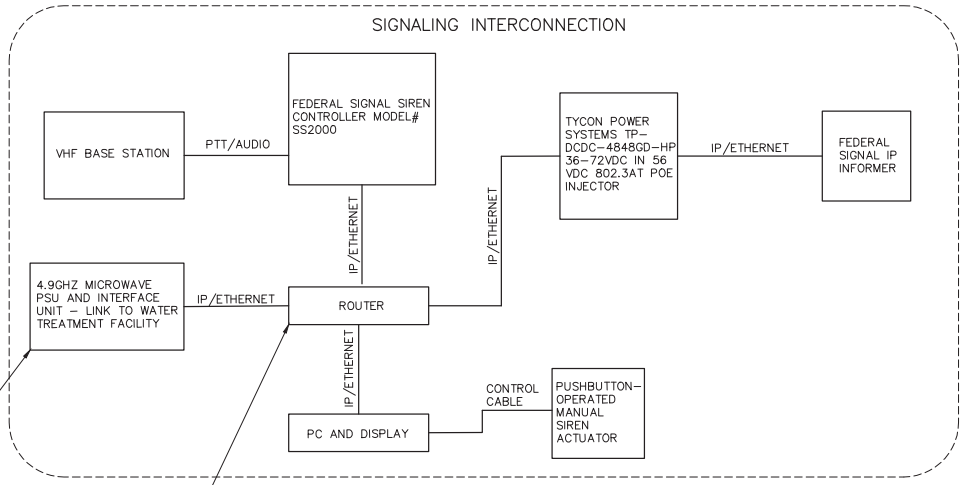

TABLE 1
−48VDC BREAKER PANEL

BREAKER POSITION	BREAKER VALUE	EQUIPMENT LOCATION	DEVICE NAME
1	30	ROW 1, RACK 2	INVERTER
2			
3	20	ROW 1, RACK 2	CONVERTER
4			
5	5	NW TOWER LEG	MICROWAVE RADIO
6			
7	5	ROW 1, RACK 2	POE INJECTOR
8			
9			
10			

TABLE 2
12VDC BREAKER PANEL

BREAKER POSITION	BREAKER VALUE	EQUIPMENT LOCATION	DEVICE NAME
1	30	ROW 1, RACK 2	VHF BASE STATION
2			
3	5	ROW 1, RACK 2	SIREN CONTROLLER
4			
5			
6			
7			
8			
9			
10			

VAULT SERIAL #	DATE	MARK	NATURE REVISIONS	MADE	CHK'D	REV'D
38384						

100% SUBMITTAL (NOT FOR CONSTRUCTION)

SWAN POWER AND CONTROL CABLE DIAGRAM

ADCOMM Engineering LLC

APPROVED FOR ADVERTISING
LIZ ALZEER
DEPARTMENT OF FINANCE & ADMINISTRATIVE SERVICES
SEATTLE, WASHINGTON . . . . . 20 . . .
BY: . . . . . .
CITY PURCHASING & CONTRACTING SERVICES DIRECTOR

INITIALS AND DATE			INITIALS AND DATE
DESIGNED	TK	6/01/22	REVIEWED: DES. CONST. SDOT PROJ. MGR.
CHECKED	JPB	6/01/22	
DRAWN	TK	6/01/22	RECEIVED
CHECKED	JPB	6/01/22	REVISED AS BUILT

ALL WORK SHALL BE DONE IN ACCORDANCE WITH THE CITY OF SEATTLE STANDARD PLANS AND SPECIFICATIONS AND OTHER DOCUMENTS CALLED FOR IN SECTION 0-02.3 OF THE PROJECT MANUAL.

STATE OF WASHINGTON JAMES P. BLASCHKA 17853 REGISTERED PROFESSIONAL ENGINEER

Seattle Public Utilities

ORDINANCE NO. PW NO. 2022-029

SCALE: NONE

TOLT DAM EARLY WARNING SYSTEM − OTHER PROJECT COMPONENTS

CIP	PC C115120 CO
VPI #	785-45
	T-306
SHEET	122 OF 134

C:\pw_ocs_working\jpb\osborneconsulting-pw.bentley.com__osborneconsulting-pw-01\jacob romero\dms26270\T-306.dwg
jpeter May-31-22 12:01pm

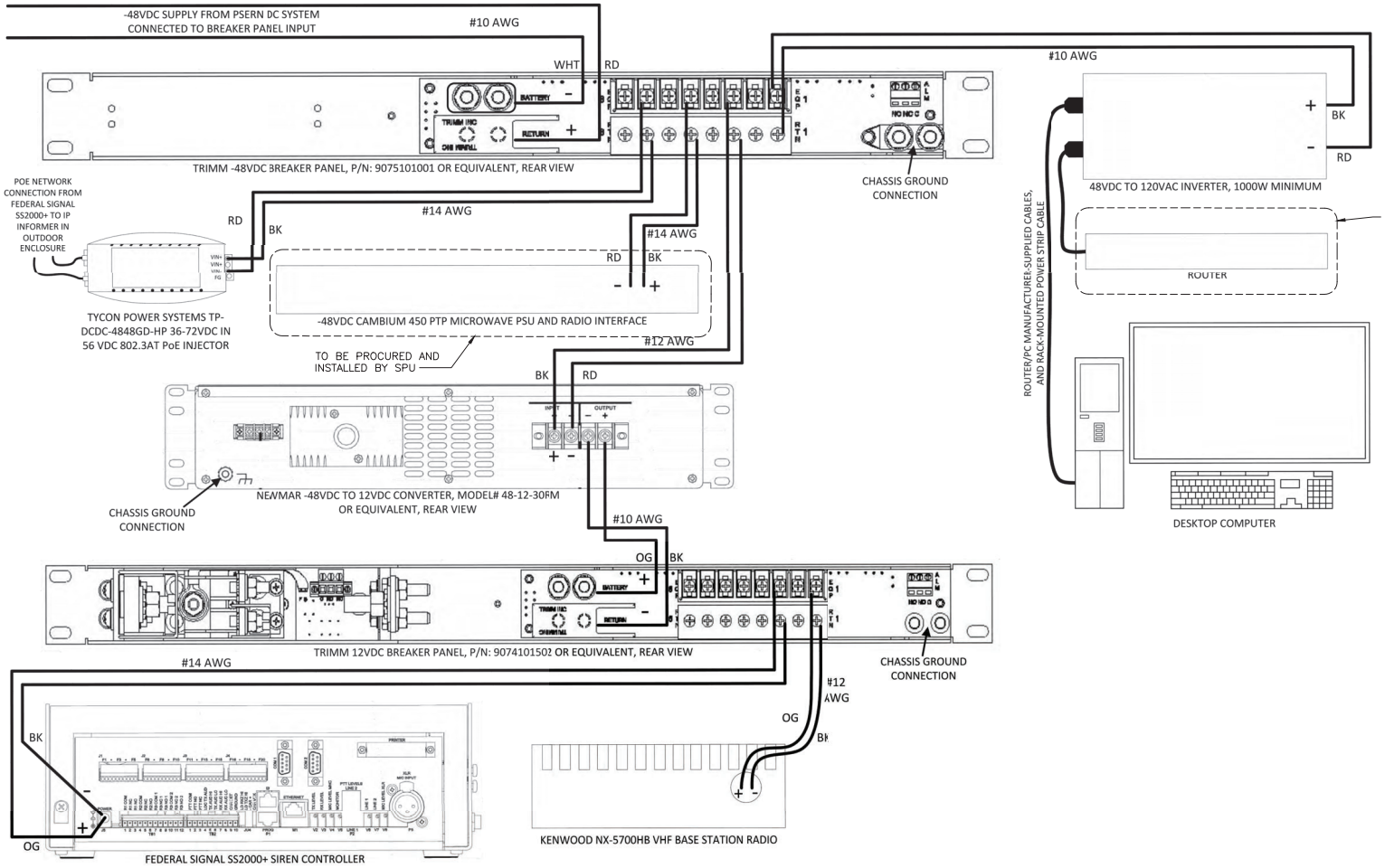

GENERAL NOTES:

1. ALL EQUIPMENT WITH CHASSIS GROUND CONNECTION POINTS BONDED TO RACK GROUND USING TRAY-RATED, #6 AWG, GREEN INSULATED, STRANDED WIRE.
2. ALL -48V DC CABLES TRAY-RATED WITH OUTER JACKET, 2-CONDUCTOR, RED AND BLACK INSULATED, STRANDED.
3. ALL 12V DC CABLES TRAY-RATED WITH OUTER JACKET, 2-CONDUCTOR, ORANGE AND BLACK INSULATED, STRANDED.
4. MINIMUM ALLOWABLE GAUGE INDICATED FOR ALL WIRING.
5. MAKE ALL CONNECTIONS FOLLOWING MANUFACTURER MANUALS, AND USING MANUFACTURER- PROVIDED OR RECOMMENDED LUGS AND HARDWARE.

VAULT SERIAL #	DATE	MARK	NATURE OF REVISIONS	MADE	CHK'D	REV'D
SS-364						

100% SUBMITTAL (NOT FOR CONSTRUCTION)

SWAN POWER WIRING DIAGRAM

ADCOMM Engineering LLC

APPROVED FOR ADVERTISING
LIZ ALZEER
DEPARTMENT OF FINANCE & ADMINISTRATIVE SERVICES
SEATTLE, WASHINGTON . . . . . 20 . . .
BY: . . . . . .
CITY PURCHASING & CONTRACTING SERVICES DIRECTOR

INITIALS AND DATE		
DESIGNED	TK	6/01/22
CHECKED	JPB	6/01/22
DRAWN	TK	6/01/22
CHECKED	JPB	6/01/22

INITIALS AND DATE
REVIEWED:
DES. CONST.
SDOT PROJ. MGR.
RECEIVED
REVISED AS BUILT

ALL WORK SHALL BE DONE IN ACCORDANCE WITH THE CITY OF SEATTLE STANDARD PLANS AND SPECIFICATIONS AND OTHER DOCUMENTS CALLED FOR IN SECTION 0-02.3 OF THE PROJECT MANUAL.

STATE OF WASHINGTON JOSEPH P. BLASCHKA 17853 REGISTERED PROFESSIONAL ENGINEER

Seattle Public Utilities

ORDINANCE NO. PW NO. 2022-029

SCALE: NONE

TOLT DAM EARLY WARNING SYSTEM – OTHER PROJECT COMPONENTS

CAD PC CO C115120
VPI # 785-45
T-307
SHEET 123 OF 134

C:\pw_pci_working\jb\osbornconsulting-pw.bentley.com_osbornconsulting-pw-01\jacob romero\dms26270\T-307.dwg
jacobr May-31-22 12:42pm